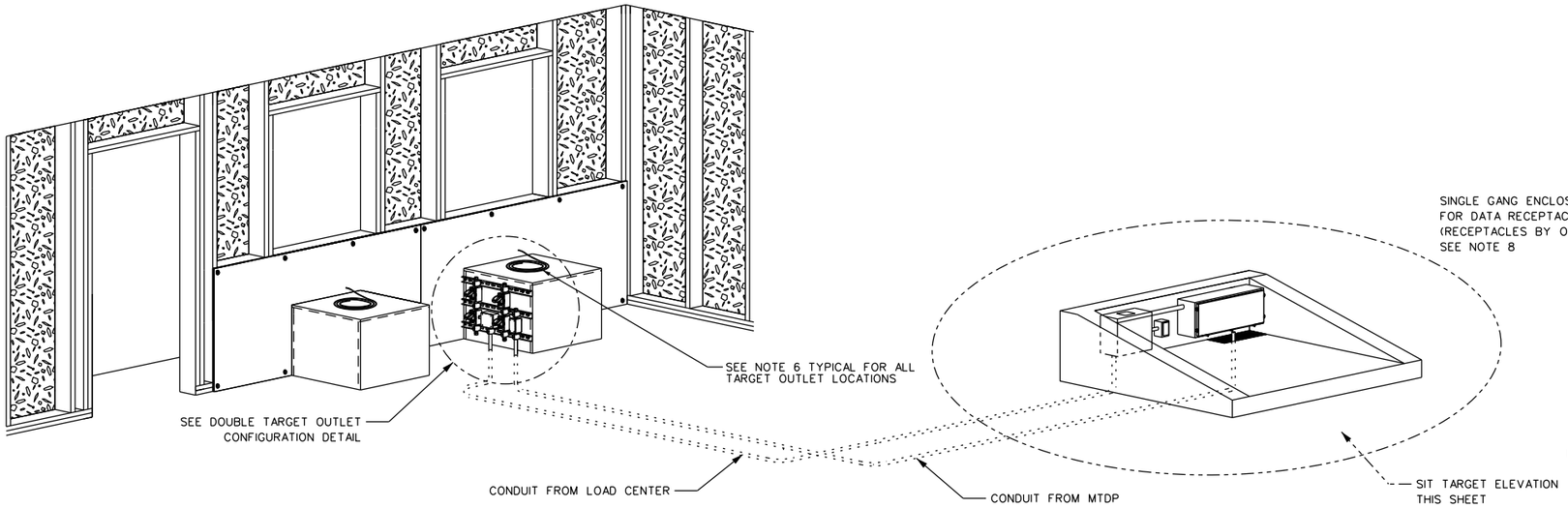

OFFENSE/DEFENSE BUILDING

SCALE: NOT TO SCALE

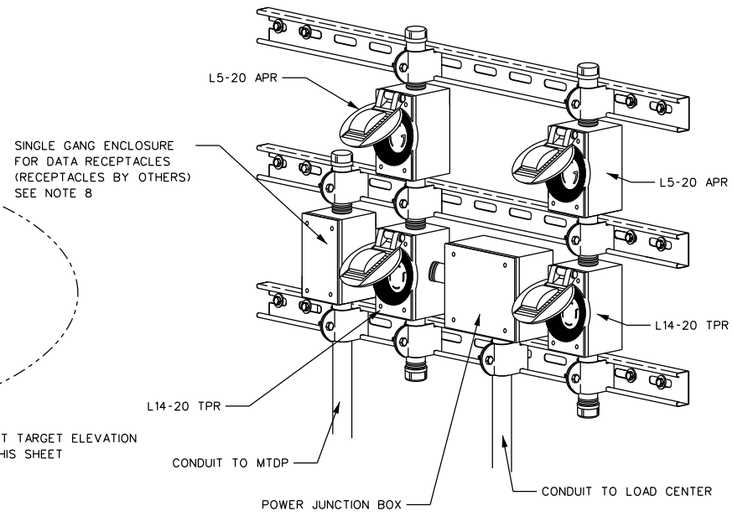

DOUBLE TARGET OUTLET CONFIGURATION

SCALE: NOT TO SCALE

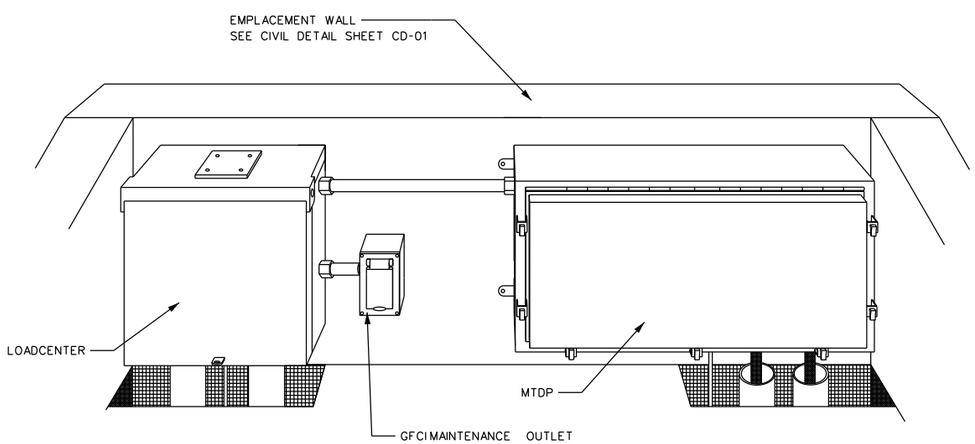

SIT TARGET ELEVATION

SCALE: NOT TO SCALE

NOTES:

1. SEE ADH-A-01 FOR ADDITIONAL REQUIREMENTS FOR THE ASSAULT / DEFEND HOUSE.
2. PROVIDE THE ASSAULT / DEFEND HOUSE WITH ONE SET OF POWER AND DATA OUTLETS IN THE DOUBLE TARGET OUTLET CONFIGURATION.
3. PROVIDE A SEPARATE EMPLACEMENT WITHIN 200 FT OF ASSAULT / DEFEND HOUSE AS SHOWN FOR POWER AND DATA. A MIT OR SAT EMPLACEMENT MAY BE USED TO SERVE POWER AND DATA TO THE ASSAULT / DEFEND HOUSE WHEN A MIT OR SAT EMPLACEMENT IS LOCATED WITHIN 200 FT OF ASSAULT DEFEND HOUSE. THE LOAD CENTER FOR THE MIT OR SAT EMPLACEMENT MUST BE PROVIDED WITH ADDITIONAL SPACES TO SERVE POWER SEPARATELY TO THE ASSAULT DEFEND HOUSE.
4. ALL DATA CABLES ROUTED TO THE ASSAULT / DEFEND HOUSE SHALL BE TERMINATED INSIDE THE MTDP IN THE SIT EMPLACEMENT AS SHOWN. FOR RANGES WHERE A MIT OR SAT EMPLACEMENT IS USED TO SERVE POWER AND DATA TO THE ASSAULT / DEFEND HOUSE PROVIDE AN ADDITIONAL MTDP LOCATED INSIDE OF THE MIT OR SAT EMPLACEMENT. THIS MTDP SHALL BE DEDICATED TO SERVING DATA TO THE ASSAULT / DEFEND HOUSE.
5. SEE SHEET ED-06 FOR MTDP REQUIREMENTS.
6. LEAVE A 6 FOOT #6 AWG BARE COPPER COIL AT EACH TARGET LOCATION FOR FUTURE CONNECTION TO TARGET MECHANISM. COPPER COIL MUST BE ELECTRICALLY CONTINUOUS TO GROUNDING ELECTRODE IN SIT EMPLACEMENT BEHIND ASSAULT / DEFEND HOUSE. GROUNDING PATHWAY MUST BE VIA #6 AWG COPPER GROUND CABLE.
7. ALL L14-20R AND L5-20R TARGET OUTLETS SHALL BE PROVIDED WITH WET LOCATION COVERS AS SHOWN IN RECEPTACLE WET LOCATION COVER DETAIL ON SHEET ED-01.
8. PROVIDE A MALE RJ45 CONNECTOR ON THE END OF EACH CAT 5E OR BETTER DATA CABLE INSTALLED IN OUTLET BOXES. PROVIDE BOXES WITH BLANK FACE-PLATE. (GOVERNMENT WILL PROVIDE AND INSTALL DATA CONNECTOR IN OUTLET FACEPLATE). PROVIDE 6" TO 12" OF CABLE BEHIND FACE PLATE TO ALLOW FOR CONNECTION OF DATA CABLE TO FUTURE DATA CONNECTOR.

US Army Corps of Engineers

Rev.	Description	Date	Approved

Designed by: | Date: | Rev.
Dwn by: | Ckd by: | Design file no.
Reviewed by: | Drawing code:
Submitted by: | File name: | Pw name: | Plot date:

U. S. ARMY ENGINEERING AND SUPPORT CENTER, HUNTSVILLE
HUNTSVILLE, ALABAMA

JANUARY 2015

RANGE AND TRAINING LAND PROGRAM
STANDARD DESIGN MANUAL

ASSAULT/DEFEND HOUSE
ELECTRICAL DETAILS

Sheet reference number:

ADH–E–04