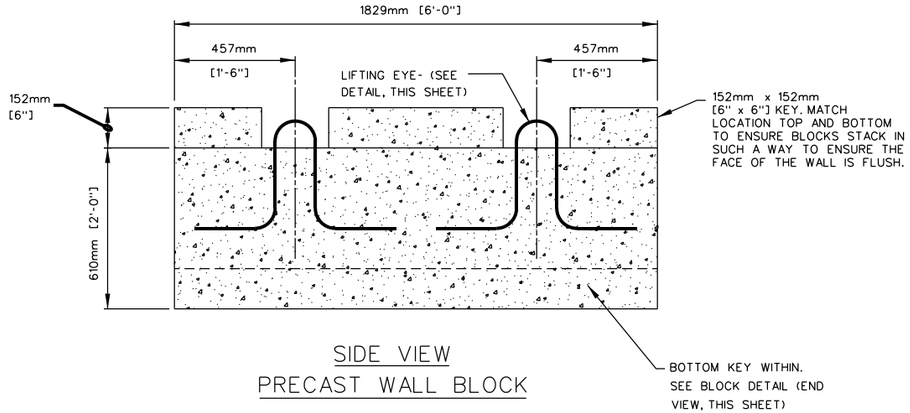

SIDE VIEW
PRECAST WALL BLOCK

SCALE: 1" = 1'

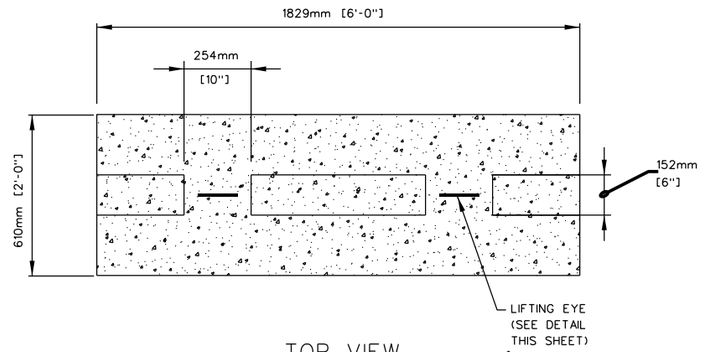

TOP VIEW
PRECAST WALL BLOCK

SCALE: 1" = 1'

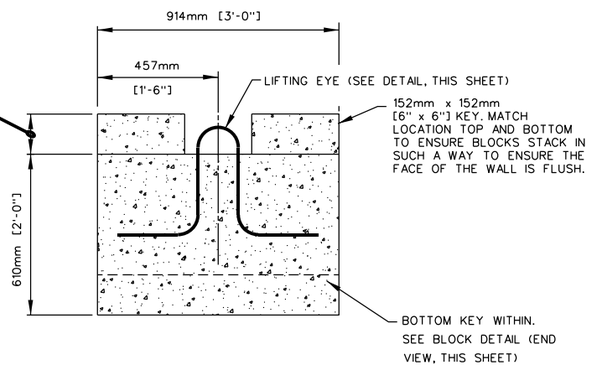

SIDE VIEW
PRECAST WALL HALF BLOCK

SCALE: 1" = 1'

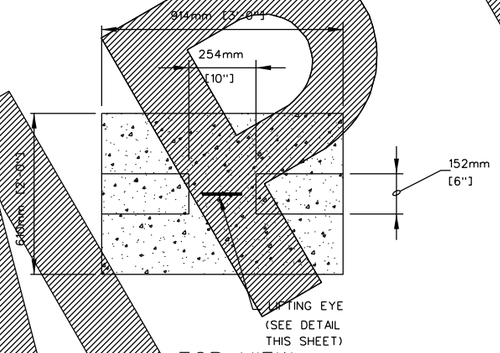

TOP VIEW
PRECAST WALL HALF BLOCK

SCALE: 1" = 1'

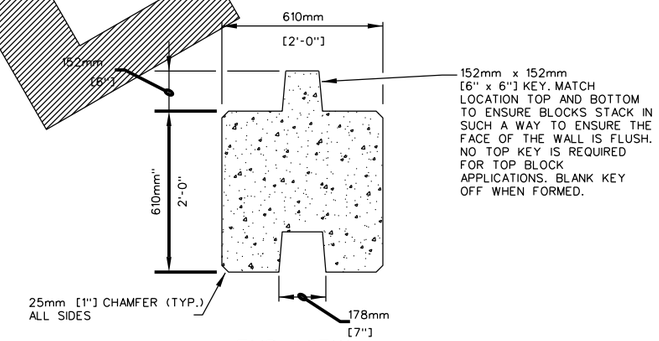

END VIEW
PRECAST WALL BLOCK

SCALE: 1" = 1'

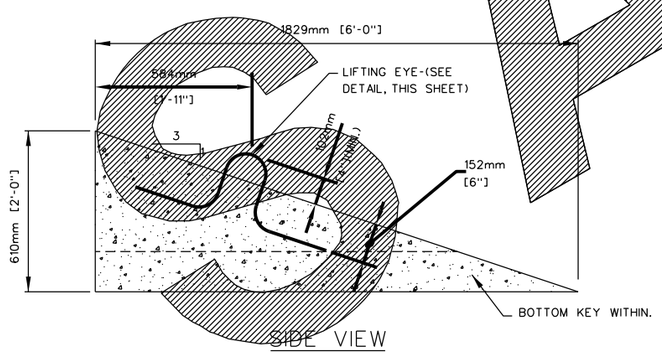

SIDE VIEW
PRECAST WALL SLOPED END BLOCK

SCALE: 1" = 1'

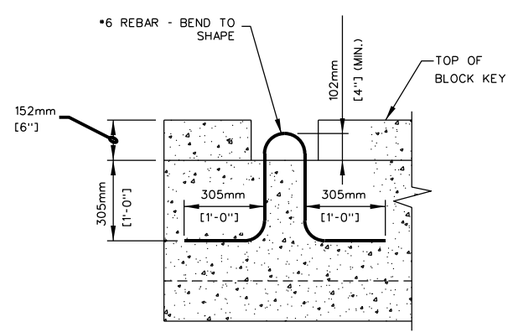

LIFTING EYE DETAIL

SCALE: 1" = 1'

NOTES:

1. CONCRETE TO BE 3,000 PSI@ 28 DAYS MIN. 5% BY VOLUME, AIR ENTRAINED.
2. ALL BLOCKS TO HAVE 25mm [1"] CHAMFER ALONG ALL SIDES.

GRAPHIC SCALE:

1 0 1 2

SCALE: 1" = 1'

SAMPLE

US Army Corps of Engineers

Rev. #	Description	Date	Approved

Designed by: | Date: | Rev.
Dwn by: | Ckd by: | Design file no.
Reviewed by: | Drawing code:
Submitted by: | File name: | Plot scale: | Plot date:

U.S. ARMY ENGINEERING AND SUPPORT CENTER, HUNTSVILLE
HUNTSVILLE, ALABAMA

JULY 2011

RANGE AND TRAINING LAND PROGRAM
STANDARD DESIGN MANUAL

CONCRETE BLOCK DETAILS

Sheet reference number:
CD-11