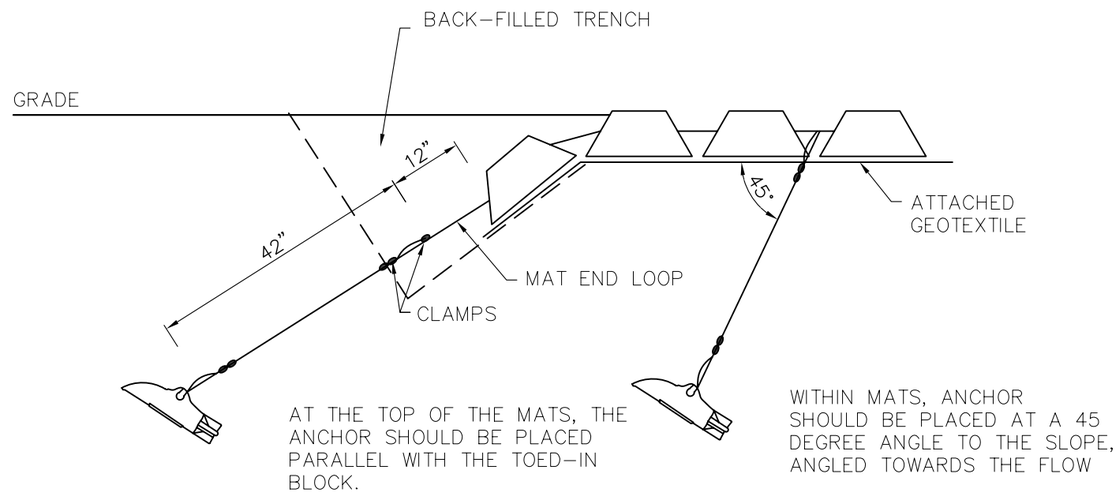

CABLE CONCRETE LEVEL GRADE ANCHOR DETAIL

SCALE : N.T.S.

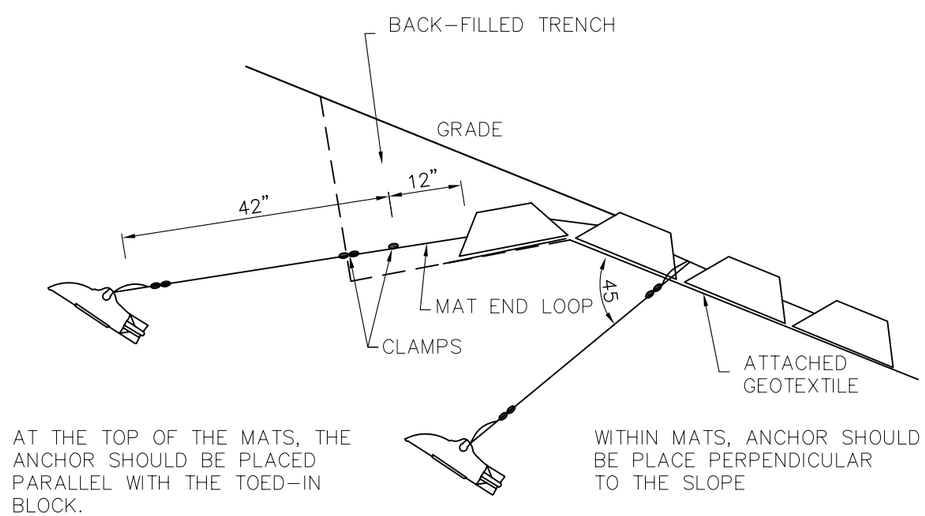

CABLE CONCRETE SLOPE ANCHOR DETAIL

SCALE : N.T.S.

9C0520000001K2-019-0	
STANDARD DWG. NO.	
DATE: 11/2006	SHEET 19 OF 24

REVISIONS		
DATE	APPROVED	TITLE

		Date
Designed	ATC	11/2005
Drawn	C.M. MORRIS	11/2005
Checked	CEJ/GMG	11/2005
Approved	G.M. GRIMM	11/2005

MILITARY ENVIROMENTAL TECHNOLOGY DEMO CENTER
ABERDEEN TEST CENTER

ENVIRONMENTAL QUALITY TECHNOLOGY PROGRAM, A(2.5.E) SUSTAINABLE ARMY LIVE-FIRE RANGE DESIGN AND MAINTENANCE

TANK TRAIL DESIGN & ACCESS SERVICE ROAD
CABLE CONCRETE ANCHOR DETAILS

ARMY Environmental Quality Technology Program

File Name:
9C0520000001K2-019-0

Project Designation:
9C0520000001K2

11/2006

Sheet 19 of 24