CAMERAS

General

This section explains the requirements for interior and exterior cameras. Two basic types of training ranges have cameras: Urban Ranges and Instrumented Training Ranges. Refer to the standard drawings and the separate range sections in the RDG for additional information.

Urban Ranges that require camera coverage are the Combined Arms Collective Training Facility (CACTF), Collective Training Facility (CTF), and Shoothouse. The CACTF and CTF have both interior and exterior cameras; the Shoothouse has only interior cameras. Training Circular (TC) 25-8 states there shall be 80% training building interior room camera coverage within 80% of the training buildings in the CACTF/CTF. The interior cameras are moveable so all buildings are wired for camera coverage.

Instrumented Training Ranges that require downrange camera coverage include the Digital Multi-Purpose Range Complex (DMPRC), Battle Area Complex (BAX), Digital Air Ground Integration Range (DAGIR), and the Digital Multi-Purpose Training Range (DMPTR). Several other non-instrument training ranges like the Scout/RECCE and Infantry Battle Courses also sometimes have cameras added; the design and construction is the same.

Exterior Cameras

Camera Towers

Instrumented Training Ranges:

The cameras used on Instrumented Training Ranges require a stable base with minimal sway due to the long sight distances involved. The maximum acceptable amount of sway for instrumented ranges is 13mm in a 50 kph wind with a 600mm cube weighing 32kg centered on top or ½ inch in a 30 mph wind with a 2 foot cube weighing 70 lbs. The camera tower provides access to the cameras to perform periodic maintenance. For camera heights of 6.1 meter (20 foot) or less, a tower that has a platform and ladder is standard. The standard for camera heights up to 10.7 meter (35 foot) is a commercial telescopic, tilt-down, or climbing type tower. Camera heights higher than 10.7 meters (35 foot) are nonstandard; special design considerations and coordination are required. MILCON provides a 600mm square, 13mm thick, mounting plate, (2 foot square, ½ inch thick). OPA provides the remainder of the mounting hardware. Refer to the Standard Camera Tower Drawings.

CACTF/CTF:

The sight distances are generally shorter and camera sway is generally less of an issue therefore a 40-foot wood Class 4 pole is the standard for a CACTF or CTF. The pole embedment must be in accordance with the UFGS, so the actual camera height will vary. Cameras placed on short towers on top of buildings are also an option. The CACTF tower does not have to be designed to provide cameras access; maintenance access is by bucket truck. The OPA contractor provides and installs all of the required mounting hardware.

Placement

Instrumented Training Ranges:

The designer determines camera placement and coverage in coordination with the installation, RTLP-MCX, and TCM-L as part of the target line of sight analysis process. TCM-L provides the total number of cameras and their specifications prior to the beginning of the design. Place the cameras so that they provide optimal coverage of firing positions and target areas. Do not place them in areas where they interfere with training or are in the line of fire. The 3D line of sight analysis must consider downrange features, targets and facades, as well as tree and vegetation obstructions when determining the camera locations and coverage. Consider the possible co-use of camera tower locations as RF node access points for the range control system when locating.

Cameras Mounted on Control Towers:

Often times on instrumented ranges, the optimum camera coverage for the range require mounting one or more cameras on the railing system on the Range Control Tower. If that is the case, the construction contract should provide a steel mounting plate for the camera, a dedicated 20-amp power circuit to the camera, a dedicated 6-strand fiber optic cable to the camera from the Control Tower data termination rack, and a camera enclosure for the mounting of all camera equipment.

The camera mounting plate shall be a 24” x 24” x ½” galvanized steel plate mounted to the corner of the Control Tower railing. The camera shall be located on one of the corners of the Control Tower railing system to provide maximum access to the camera enclosure, and to provide the sturdiest location for mounting the camera on the railing system. The designer should include camera sway consideration when designing the materials and type of railing system for a control tower that contains an exterior field camera. A camera enclosure shall be provided in accordance with the Exterior Camera paragraph included in this section. This camera enclosure shall be mounted in the corner to permit the lid to be opened and provide access to the camera equipment for installation and routine maintenance. A dedicated 20 amp circuit shall be run to the duplex receptacle located inside this camera enclosure. Include a dedicated 6-strand fiber optic cable run from the camera enclosure back to the Control Tower data termination rack, (DTR).

CACTF:

Exterior camera placement is determined during the design process. Cameras are generally thermal and/or low light exterior cameras with pan and tilt, selectable fields of view (FOV) and zooming capabilities. TCM-L provides the exact camera specifications at the beginning of the design. The design team including combat and material developers determines the exact number, typically three to four, and location of camera towers during the design process to ensure the design provides sufficient coverage and infrastructure. Place cameras in locations to capture tactical movements, building entry techniques, major avenues of approach, and safety monitoring during day, night, and adverse weather in and around the CACTF training area. The design must balance the training requirements for video capture with the capabilities and number of the cameras provided to place the cameras in the optimal locations. Designers must use a 3D analysis tool that considers building heights, fences and walls, tree and vegetation obstructions, and future construction when determining the camera locations and line of sight coverage.

Interior Cameras

Camera Brackets

The MILCON contractor provides and installs the camera bracket. The bracket has specific construction and mounting specifications. It must support a minimum load of 70kg with 300mm eccentricity (150lbs and 1ft). The drawings showing the details for fabrication of the bracket are included at the end of this section.

Interior Camera Bracket (CACTF Only)

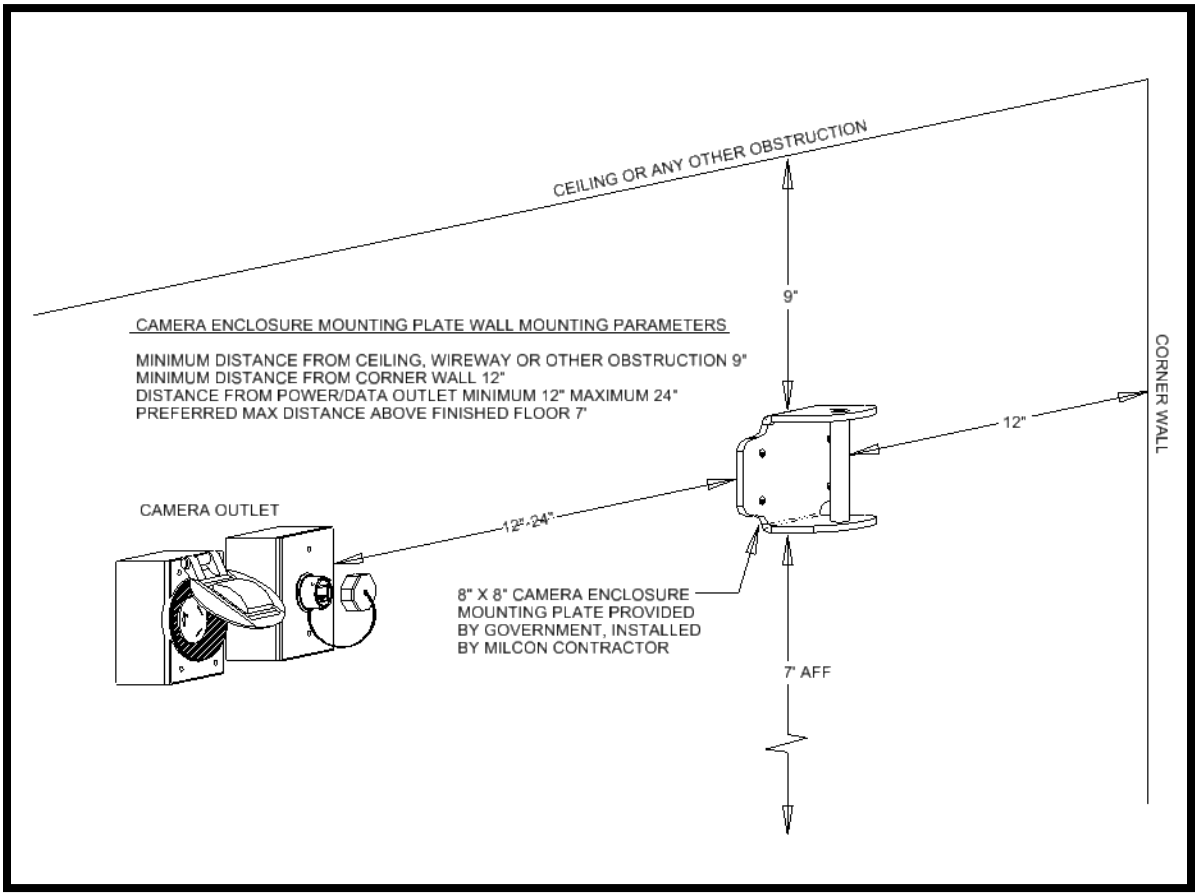

Representative Interior Camera Hanger Location (CACTF Only)

Electrical

Exterior Cameras

All camera towers or poles located downrange require a NEMA 4 rated camera data enclosure at a minimum size of 610mm (2.0')W x 914mm (3.0')H x 203mm (8")D with a full back plate, and a small NEMA 3R rated, 120/240V circuit breaker enclosure (4 single pole breaker spaces) with transient voltage surge suppression (TVSS). The Circuit Breaker Enclosure feeds the receptacle in the Camera Data Enclosure. It also has spare breakers for future loads on the camera, e.g. warning light atop the camera tower, an RF node access point, etc. Refer to the Example Exterior Camera Enclosure Figure for additional information. Mount the enclosures at the base of the pole or tower for the installation of power and fiber optic cabling. Supply power via the Power Center (PC) distribution panel. The power and data requirements shall be as follows:

\

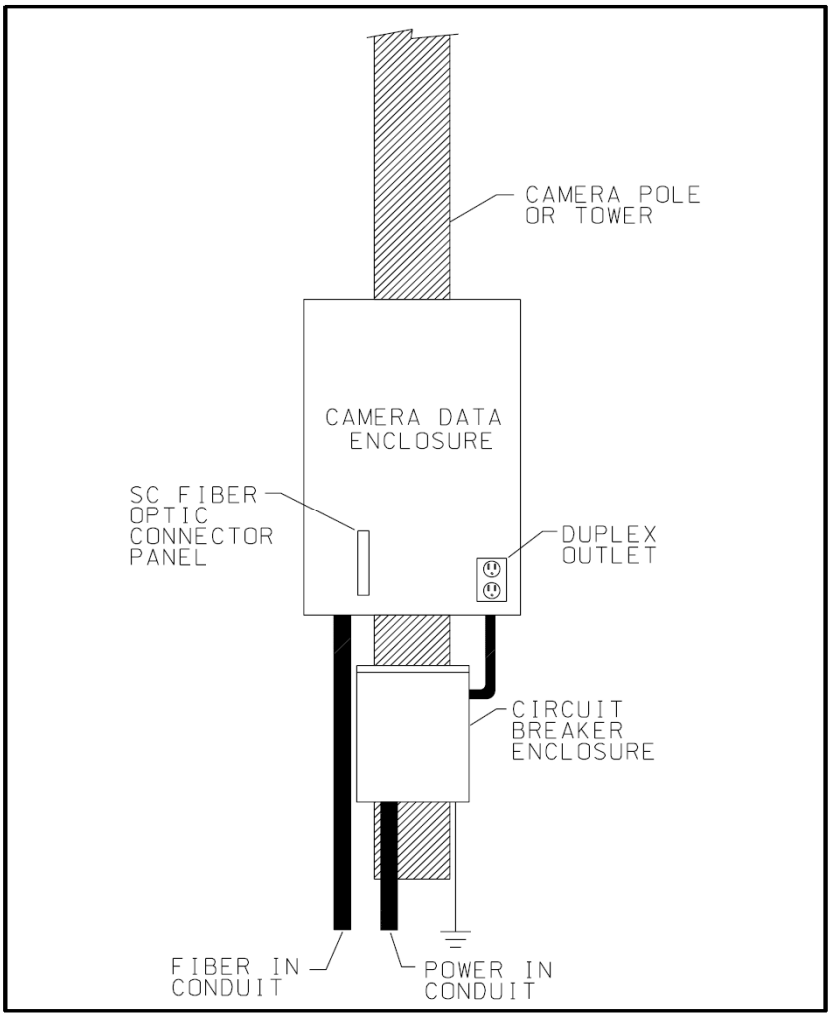

Example Exterior Camera Enclosure (Not to Scale)

Power:

One dedicated 120Vac, 20amp, duplex receptacle mounted on the back plate in the lower right-hand corner of the camera data enclosure.

Data:

Each exterior camera requires a dedicated six-strand fiber optic cable. Install a dedicated six-strand single-mode fiber optic cable from the Range Operations Center (ROC) to the camera tower or pole terminated in the data cable enclosure and tested on a surface mount SC patch panel for distribution. Provide separate six-strand cables for each camera if a tower has multiple cameras.

When the camera is located in the CACTF training area, the cable may be routed via local electrical/communication room rack-mounted patch panels. Mount the camera data enclosure patch panel on the back plate in the lower left-hand corner.

Interior Cameras

CACTF:

The cameras inside the CACTF and Live Fire Shoothouse training buildings are IP based cameras. Each camera outlet will have NEMA L5-20R outlet for power and for data a harsh environment, RJ-45 connector, data outlet with a dust cap for protection of outlet when not in use. All camera outlets shall be mounted at a minimum 2134mm (7 ft) A.F.F. to the bottom of the outlet box. Conduits shall not be installed on the interior walls below 2134mm (7 ft) A.F.F. Locate the camera brackets near the camera outlets as shown in the Camera Bracket section in this document. A speaker outlet has the same configuration as the camera outlet. Speaker outlets are normally centrally located in a corridor with one speaker per floor. Coordinate camera and speaker locations with TCM-L and the installation trainers.

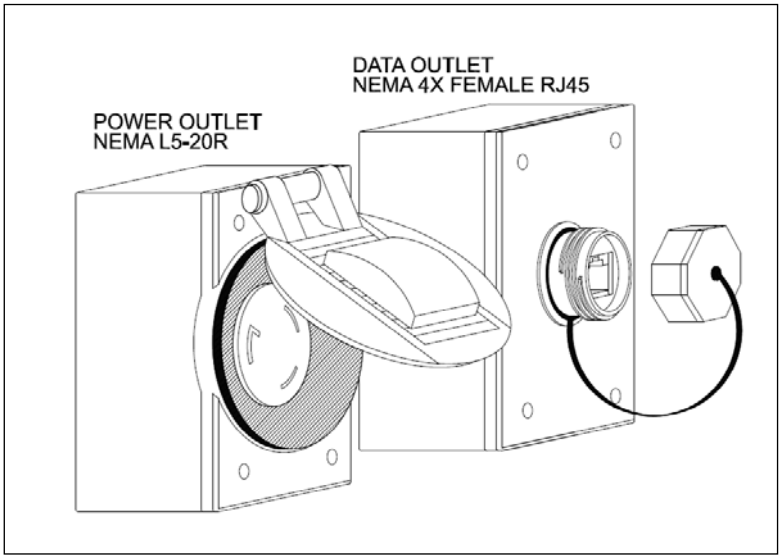

Representative Interior Camera Outlets

Power Outlets

Camera power outlets shall be weatherproof when in use and when they are not in use. Camera power outlets shall have weatherproof wet location covers with ethylene propylene rubber gaskets in the throat of the outlet to prevent the entrance of moisture and dirt when the cover is open and the plug is inserted. Provide camera outlet with spring-loaded covers that will close when a plug is not inserted into the outlet.

Data Outlets

The data outlet and enclosure shall be a harsh environment, industrial Ethernet outlet capable of supporting a CAT 5E connection per TIA/EIA 568 B. The Government will provide the MILCON contractor with harsh environmental industrial Ethernet outlet. The outlet will be an Amphenol RJ Field style outlet. The MILCON contractor shall install the Amphenol outlet seated with the Amphenol specific Code A keying sequence. The MILCON contractor shall terminate the data cable into the back of the Amphenol outlet with a standard male RJ-45 connector.

Amphenol RJ-Field Ethernet Connector (Code A Keying Sequence)

Shoothouse:

MILCON provides 12 sets of camera power and data outlets and 2 sets of speaker outlets on the ceiling of the Live Fire Shoothouse. MILCON also provides four additional sets of power and data outlets outside the entrances to the Shoothouse. Run the power and data wires in conduit from the camera locations to the electrical room. Coordinate the location of the outlets with TCM-L and the OPA provider. The electrical outlets for the shoothouse are the same as the electrical outlets for the CATCF. See CATCF section for outlet requirements. The OPA contractor provides the camera data connector and dust cover to the MILCON contractor who installs them.

SIZE	DWG NO.	SH	REV
D	16001807	1	3

NOTES: UNLESS OTHERWISE SPECIFIED

1. DIMENSIONING AND TOLERANCING IAW ASME Y14.5M-1994.
2. REMOVE BURRS AND BREAK SHARP EDGES .010 MAX.
3. SURFACE TEXTURE: 125 OR BETTER.
4. MATERIAL: 1020 COLD ROLLED STEEL.
5. ASSEMBLE IAW R17521, REQ. 5 AND 9.
6. FINISH: FINISH: POWDER COAT IAW R17521, REQ 20, COLOR: FLAT BLACK.
7. ITEM IDENTIFICATION: BAG OR TAG IAW MIL-STD-130
   IDENTIFY AS 02SW3-16001807 -(APPLICABLE DASH NUMBER).

CAD MAINTAINED CHANGES
SHALL BE INCORPORATED BY
THE DESIGN ACTIVITY

REVISIONS

REV	DESCRIPTION	APPROVED	DATE
1	RELEASE FOR PROTOTYPE	DAHUYETT	10-01-27
2	PRE-PRODUCTION RELEASE	KEHARMENING	10-01-28
3	REVISE ROTATIONAL LOCKING MECHANISM	DAHUYETT	10-03-19

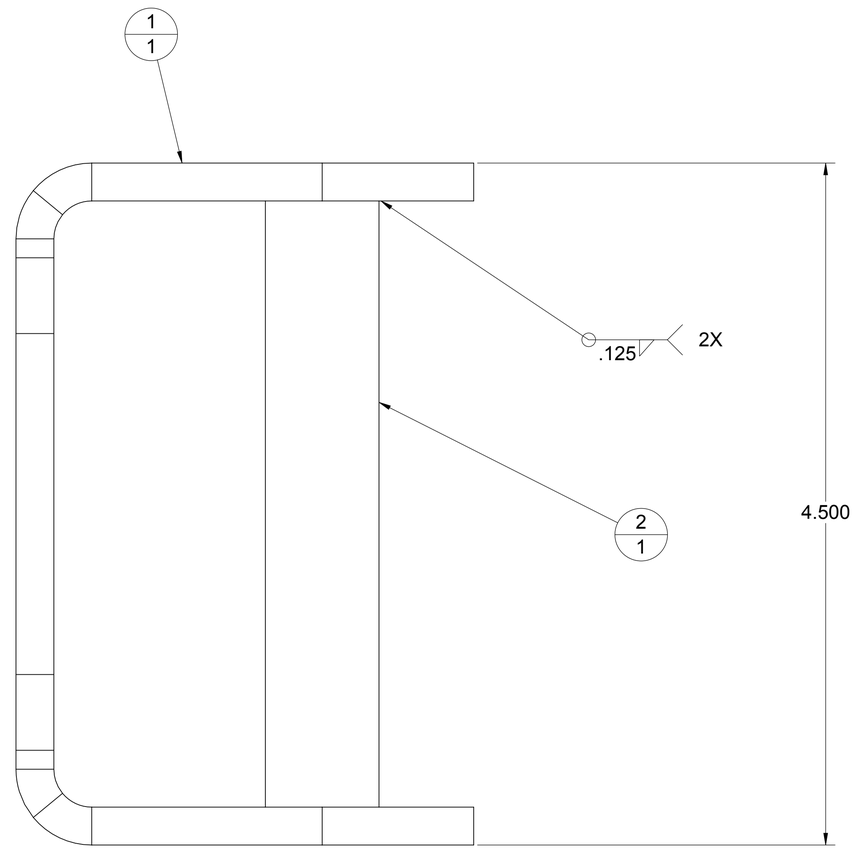

-3

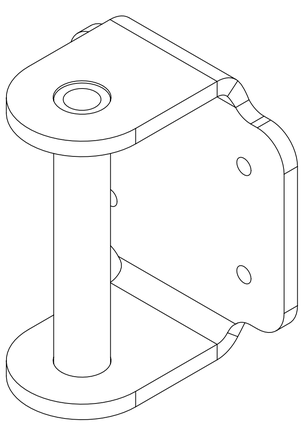

-3
FOR REFERENCE ONLY
SCALE: NONE

INSEPARABLE ASSEMBLY
SEE SEPARATE PARTS LIST

PART NUMBER:16001807-3
PART NUMBER:16001807-1
SHOP PRACTICE AND TOLERANCE IAW R17521, REQUIREMENT 17

WARNING - THIS DOCUMENT CONTAINS TECHNICAL DATA AS DEFINED BY THE INTERNATIONAL TRAFFIC IN ARMS REGULATIONS (ITAR) AND IS SUBJECT TO U.S. EXPORT CONTROL LAWS. TRANSFER OF THIS DATA BY ANY MEANS TO A FOREIGN PERSON WHETHER IN THE U.S. OR ABROAD, WITHOUT AN EXPORT LICENSE OR OTHER U.S. GOVERNMENT APPROVAL IS PROHIBITED

UNLESS OTHERWISE SPECIFIED	SIGNATURES	DATE
DIMENSIONS ARE IN INCHES TOLERANCES ON: 2 PL. DECIMALS ± 0.03 3 PL. DECIMALS ± 0.010 ANGLES ± 0.5° FRACTIONS ± 1/32 63	DRAWN : KEH	10-01-05
	CHECKED :	
	ENGRG :	
	MFG :	
THIRD ANGLE PROJECTION		
	CONTRACT NO.	
ALL SHEETS ARE THE SAME REVISION STATUS		

LOCKHEED MARTIN
3850 QUADRANGLE BLVD., ORLANDO, FLORIDA 32817

TITLE:
BRACKET, WALL MOUNT

SIZE	CAGE CODE	DWG NO	REV
D	02SW3	16001807	3

SCALE: 2:1 | WEIGHT: | SHEET 1 OF 2

Solidworks

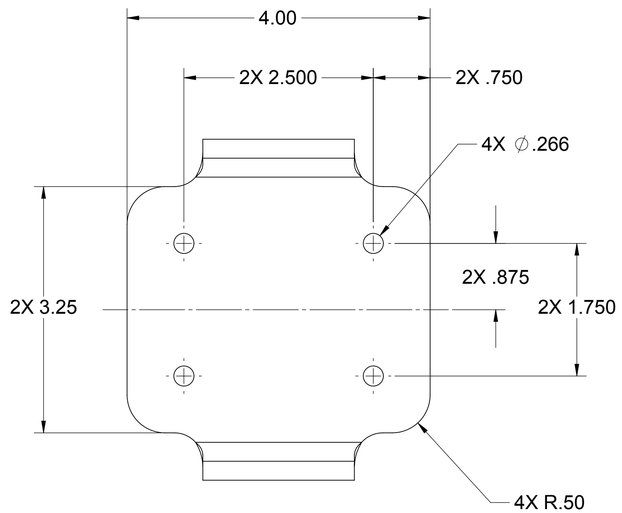

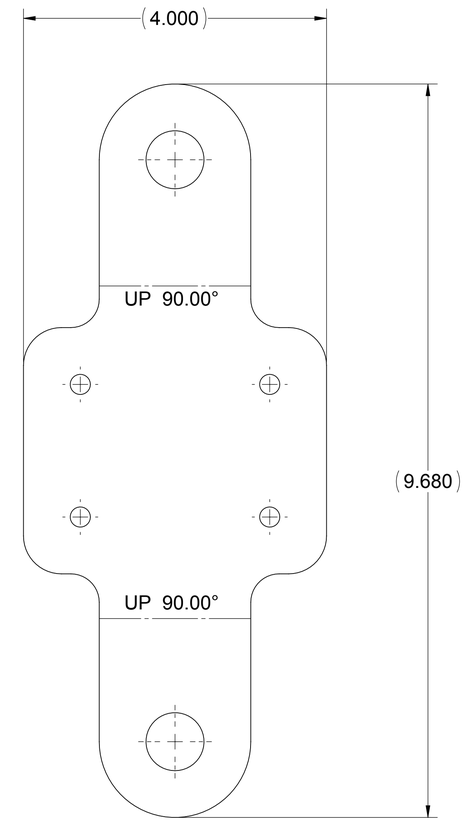

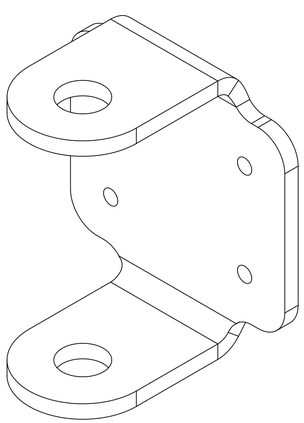

-1
FOR REFERENCE ONLY
SCALE: NONE

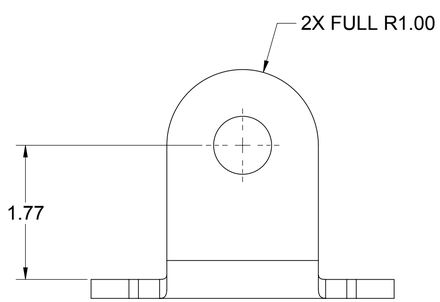

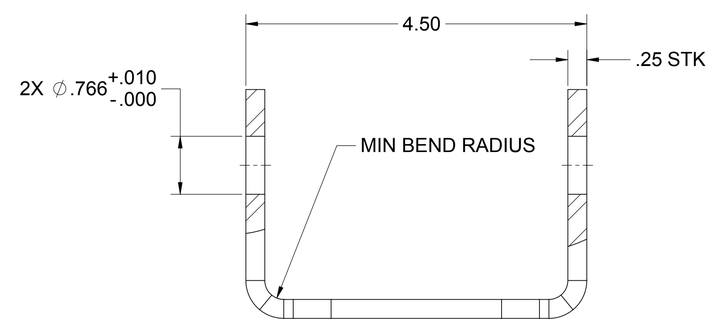

-1

SIZE	CAGE CODE	DWG NO	REV
D	02SW3	16001807	3
SCALE: 1:1			SHEET 2 OF 2