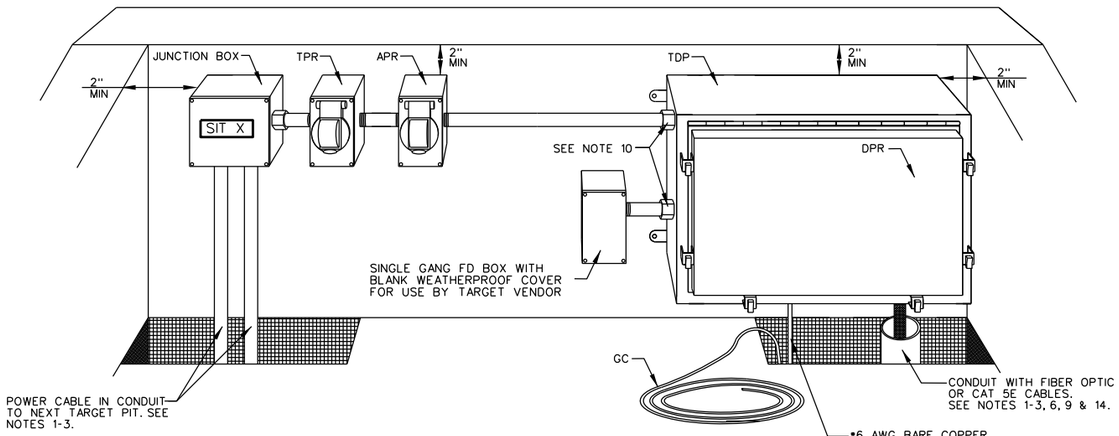

SLAVE EMPLACEMENT (SE)

SCALE: NOT TO SCALE

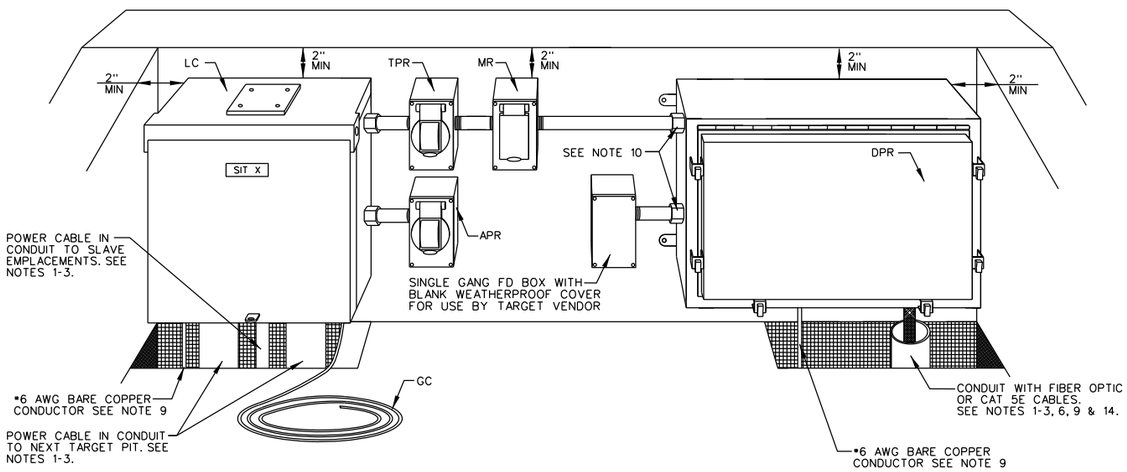

MASTER POWER EMPLACEMENT (MPE)

SCALE: NOT TO SCALE

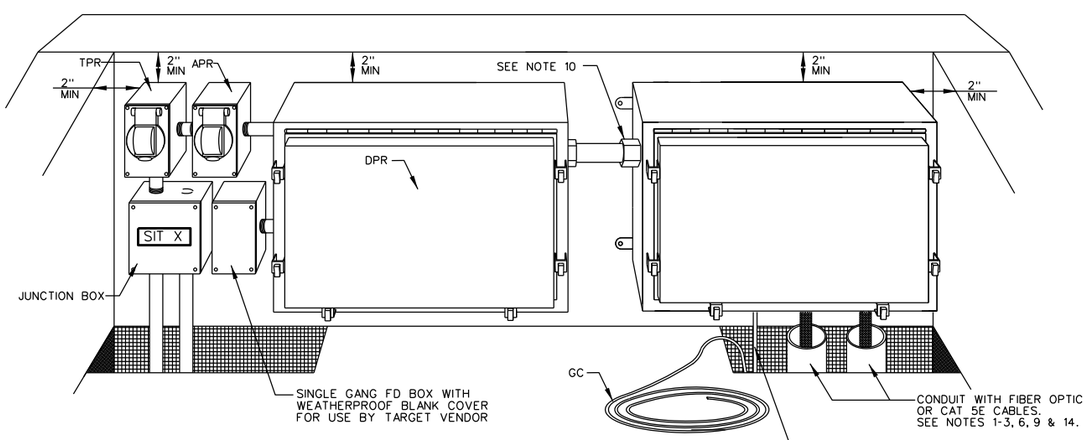

MASTER DATA EMPLACEMENT (MDE)

SCALE: NOT TO SCALE

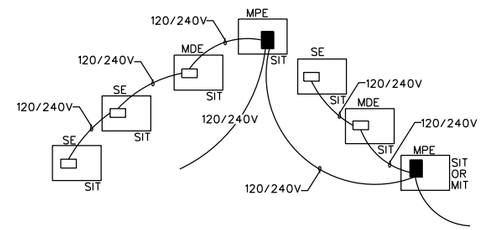

POWER ONLY

SCALE: NOT TO SCALE

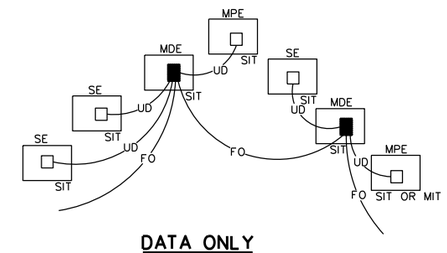

DATA ONLY

SCALE: NOT TO SCALE

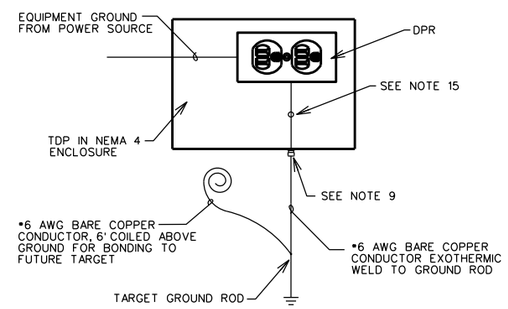

EMPLACEMENT GROUNDING DETAIL

SCALE: NOT TO SCALE

LEGEND:

TPR	TARGET POWER RECEPTACLE 120/240V, 20A, 4 WIRE. TWIST LOCK IN WEATHERPROOF ENCLOSURE WITH WET LOCATION COVERS (NEMA L14-20R). SEE NOTE 4.
APR	AUXILIARY POWER RECEPTACLE 120V, 20A, 3 WIRE, TWIST LOCK (NEMA L5-20R) WITH WET LOCATION COVER IN WEATHERPROOF ENCLOSURE. SEE NOTE 4.
TDP	TARGET DATA PANEL IN NEMA 4 ENCLOSURE WITH LATCHED TYPE REMOVABLE LID, CONTINUOUS HINGE WITH REMOVABLE PIN. SEE NOTE 2. SEE SHEET ED-07 FOR TDP DETAIL.
MTDP	MASTER TARGET DATA PANEL IN NEMA 4 ENCLOSURE WITH LATCHED TYPE REMOVABLE LID, CONTINUOUS HINGE WITH REMOVABLE PIN. SEE NOTE 2. SEE SHEET ED-06 FOR TDP DETAIL.
DPR	DATA POWER RECEPTACLE (DPR) LOCATED INSIDE PANEL, RECEPTACLE NOT SHOWN FOR CLARITY.
MR	GFCI MAINTENANCE RECEPTACLE IN WEATHER PROOF ENCLOSURE WITH COVER.
LC	WALL MOUNTED NEMA 3R LOADCENTER 13"H X 12"W X 6"D MAX.
GC	GROUND COIL •6 AWG BARE COPPER CONDUCTOR, 6' COILED ABOVE GROUND FOR BONDING TO FUTURE TARGET.
DATA	SINGLE GANG FD BOX WITH BLANK COVER FOR USE BY TARGET VENDOR.
MPE	MASTER POWER EMPLACEMENT
MDE	MASTER DATA EMPLACEMENT
SE	SLAVE EMPLACEMENT

NOTES:

1. CONDUIT TO EXTEND 5 FEET BEYOND EMPLACEMENT.
2. CABLES/CONDUITS ARE ROUTED FROM SIDE OF BERM TO PREVENT CABLE DAMAGE DURING MAINTENANCE OF BERM.
3. ROUTE UNDER SLAB. POWER AND DATA INSTALLED IN SAME TRENCH.
4. EQUIPMENT SHALL NOT BE MOUNTED HIGHER THAN 2" FROM TOP OF EMPLACEMENT WALL.
5. WHEN FIBER OPTIC CABLE IS NOT USED, 16"X12" TARGET DATA PANEL (TDP) CAN BE USED INSTEAD OF 24"X12" MASTER TARGET DATA PANEL (MTDP). FIBER PATCH PANEL IS NOT REQUIRED IN TDP.
6. THE ENDS OF THE CAT5E CABLES SHALL BE TERMINATED WITH A DATA SURGE PROTECTOR.
7. WIRE THE DPR AHEAD OF THE GFCI MAINTENANCE RECEPTACLE TO AVOID NUISANCE TRIPPING.
8. PERMANENTLY LABEL THE EMPLACEMENT ACCORDING TO THE CIVIL AND ELECTRICAL DESIGNATIONS.
9. PROVIDE SEAL FITTINGS AS SHOWN IN CABLE SEAL FITTING DETAIL SHEET ED-01 ON ALL CABLE ENTRANCES INTO NEMA 4, 4X, OR 6P RATED ENCLOSURES.
10. INSTALL MYERS TYPE HUBS ON ALL CONDUIT PENETRATIONS TO SIDE OF ENCLOSURE.
11. ALL DIMENSIONS SHOWN IN INCHES UNLESS OTHERWISE NOTED.
12. PROVIDE TARGET AND AUXILIARY OUTLETS WITH NEMA 3R WET LOCATION COVERS MAKING OUTLETS SUITABLE FOR USE IN WET LOCATIONS. SEE DETAIL SHEET ED-01 FOR WET LOCATION COVER. IN USE COVERS SUCH AS LEVITON M59X TYPE OUTLET COVER WILL NOT CLOSE OVER TARGET PLUG AND CORD.
13. DEVIATIONS TO THE EQUIPMENT SIZES, EQUIPMENT NUMBERS, RECEPTACLE COVERS, OR CABLE ENTRY METHODS INTO ENCLOSURES WILL REQUIRE RANGE TRAINING AND LAND PROGRAM HUNTSVILLE CENTER MANDATORY CENTER OF EXPERTISE APPROVAL.
14. CONDUIT STUBBED UP AS CLOSE TO CABLE SEAL FITTING AS POSSIBLE.
15. BOND EQUIPMENT GROUND FROM POWER SOURCE TO TARGET DATA PANEL (TDP).

US Army Corps of Engineers

Rev.	Description	Date	Approved
*			

Designed by: | Date: | Rev.
Dwn by: | Ckd by: | Design file no.
Reviewed by: | Drawing code:
Submitted by: | File name: / Plot scale: / Plot date:

U. S. ARMY ENGINEERING AND SUPPORT CENTER, HUNTSVILLE
HUNTSVILLE, ALABAMA

JUNE 2015

RANGE AND TRAINING LAND PROGRAM
STANDARD DESIGN MANUAL

SIT / MIT CLUSTER
ELECTRICAL DETAILS

Sheet reference number:
ED-05

Sheet of