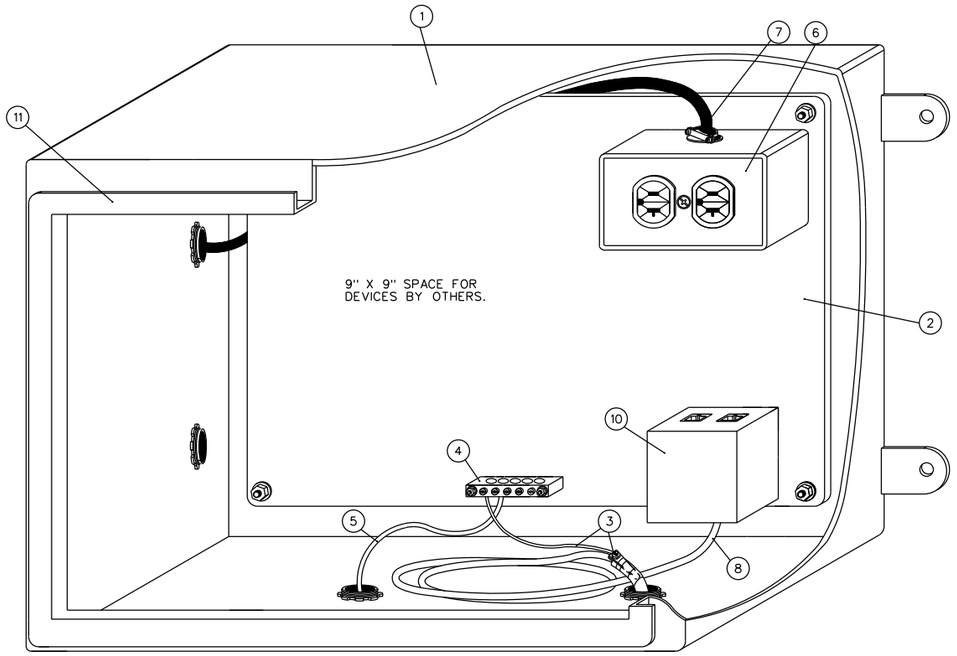

TYPICAL TARGET DATA PANEL (TDP) DETAIL AT TARGET EMPLACEMENT

NOT TO SCALE

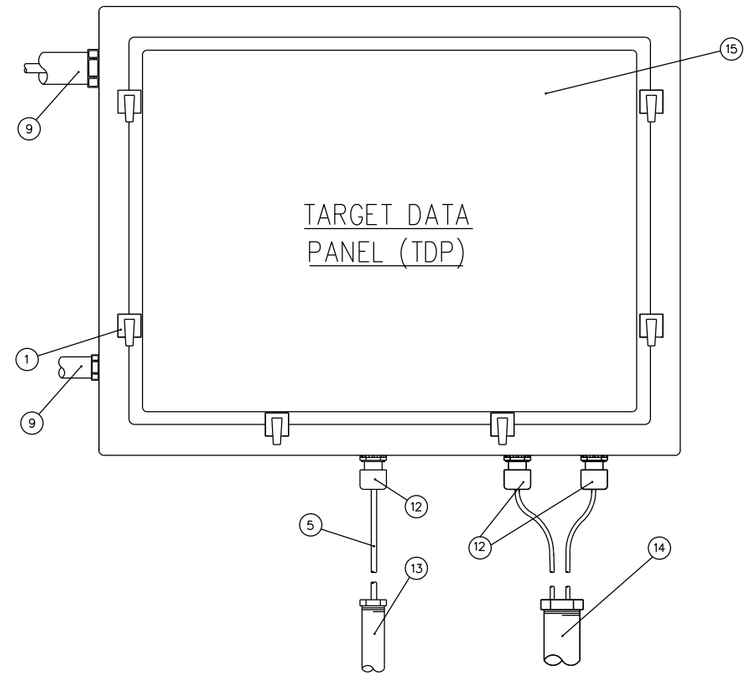

KEY NOTES

1. ENCLOSURE SHALL BE 16 GAUGE MINIMUM GALVANIZED STEEL SHEET METAL WITH WALL MOUNT BRACKETS. ENCLOSURE SHALL CARRY A NEMA 4 RATING AND BE TESTED BY UL OR OTHER APPROVED TESTING AGENCY. PROVIDE ENCLOSURE WITH FAST OPERATING CLAMP ASSEMBLY. BOLT TYPE CLAMPS ARE NOT ACCEPTABLE. (SEE GENERAL NOTE 3.)
2. METAL BACK PLATE TO SECURE COMPONENTS INSIDE ENCLOSURE.
3. METALLIC CABLE SHEATH GROUNDING CLAMP AND GROUNDING CONNECTOR, BOND CABLE ARMOR/SHIELD TO TDP BACK PLATE GROUNDING BAR. ALL GROUND CABLES NOT SHOWN FOR CLARITY.
4. GROUND BAR - SECURE TO METAL BACK PLATE.
5. #6 AWG BARE COPPER GROUNDING CONDUCTOR.
6. DATA PANEL RECEPTACLE (DPR) - 20 AMP, 125 VOLT, 2 POLE, 3 WIRE GROUNDING TYPE IN A STANDARD SINGLE-GANG METAL BOX AND GALVANIZED STEEL DEVICE PLATE. CONNECT DPR AHEAD OF GFCI MAINTENANCE RECEPTACLE TO AVOID NUISANCE TRIPPING.
7. 2/C #12 WITH GROUND TYPE "SO" CORD IN CONDUIT FROM CIRCUIT BREAKER LOADCENTER FOR 120 VOLT, 1-PHASE SERVICE TO DUPLEX RECEPTACLE. RECEPTACLE SHALL NOT BE FED FROM ANY GROUND FAULT INTERRUPTING DEVICE.
8. DIRECT BURIAL GRADE CATEGORY 5E SHIELDED CABLES. COIL 3' SLACK IN TDP AT EACH END AND PROVIDE STRAIN RELIEF. BOND CABLE SHIELD TO TDP BACK PLATE GROUNDING. ALL CABLES NOT SHOWN FOR CLARITY.
9. PROVIDE MYERS HUB TYPE FITTING AT CONDUIT PENETRATION.
10. PROVIDE MODULAR JACK WITH 110 BLOCKS ON LINE SIDE AND RJ45 OUTLETS ON EQUIPMENT SIDE TO TERMINATE CAT 5E CABLES ENTERING OR EXITING ENCLOSURE.
11. TDP SHALL HAVE A ROLLED FLANGE AROUND PERIMETER OF OPENING.
12. PROVIDE ONE CABLE SEAL FITTING FOR EACH CABLE. SEE "TYPICAL CABLE SEAL FITTING DETAIL." SHEET ED-01
13. CONDUIT FOR #6 AWG, 600 VOLT GROUNDING CONDUCTOR TO TARGET EMPLACEMENT GROUND ROD. STUB CONDUIT UP ABOVE SLAB AND SEAL WATERTIGHT WITH DUCT SEALANT - FOAM IS NOT ACCEPTABLE.
14. CONDUIT WITH DIRECT BURIAL GRADE CAT 5E CABLES, SEE TARGET EMPLACEMENT PLAN AND ELEVATION. STUB CONDUIT UP ABOVE SLAB AND SEAL WATERTIGHT WITH DUCT SEALANT - FOAM IS NOT ACCEPTABLE.
15. HINGED COVER WITH CORROSION-RESISTANT STAINLESS STEEL CAPTIVE CLAMPS. HINGE MUST HAVE REMOVABLE PIN. PROVIDE A SEAMLESS FOAM-IN-PLACE GASKET FOR A WATERTIGHT AND DUST TIGHT SEAL.

GENERAL NOTES

1. PROVIDE CABLE IDENTIFICATION DIRECTORY ON INSIDE OF COVER.
2. LABEL ALL CABLES WITH ADHESIVE POLYETHYLENE WRAP AROUND LASER PRINTED LABELS INDICATING CABLE DESTINATION AND CABLE TYPE.
3. TDP SHALL BE 16"W X 12"H X 6"D.
4. ALL COMPONENTS INSTALLED INSIDE TDP ENCLOSURES SHALL BE SECURED BY MECHANICAL MEANS. ADHESIVES ARE NOT ALLOWED FOR SECURING COMPONENTS INSIDE TDP ENCLOSURES.
5. CAT 5E DATA CALBES PROVIDE THE MINIMUM PERFORMANCE REQUIREMENTS FOR COPPER DATA CABLES. DATA CABLES THAT EXCEED CAT 5E PERFORMANCE REQUIREMENTS MAY BE USED AS LONG AS ALL PHYSICAL REQUIREMENTS SPECIFIED HEREIN ARE MAINTAINED.

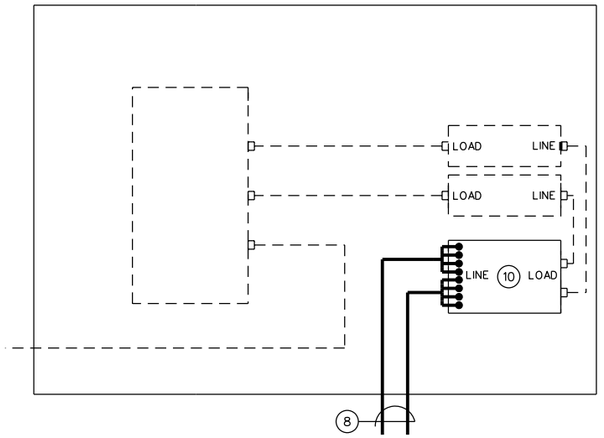

TDP DATA WIRING SCHEMATIC

PROVIDED BY MCA CONTRACTOR (QUANTITIES VARY)

PROVIDED BY OPA CONTRACTOR

US Army Corps of Engineers

Rev.	Description	Date	Approved
Rev. *			

Designed by: | Date: | Rev.
Dwn by: | Ckd by: | Design file no. | Drawing code:
Reviewed by: | File name:
Submitted by: | Pw name: | Pw code:

U. S. ARMY ENGINEERING AND SUPPORT CENTER, HUNTSVILLE
HUNTSVILLE, ALABAMA

JUNE 2015

RANGE AND TRAINING LAND PROGRAM
STANDARD DESIGN MANUAL

TARGET DATA PANEL
ELECTRICAL DETAILS

Sheet reference number: ED-07

Sheet ___ of