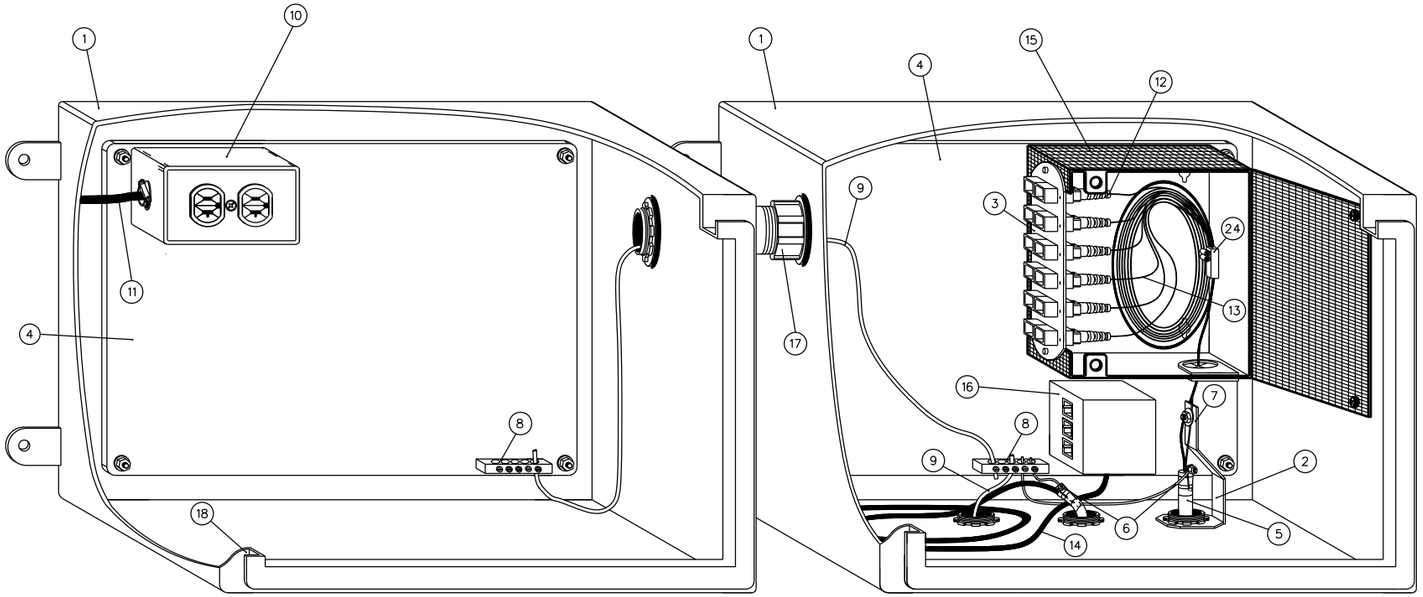

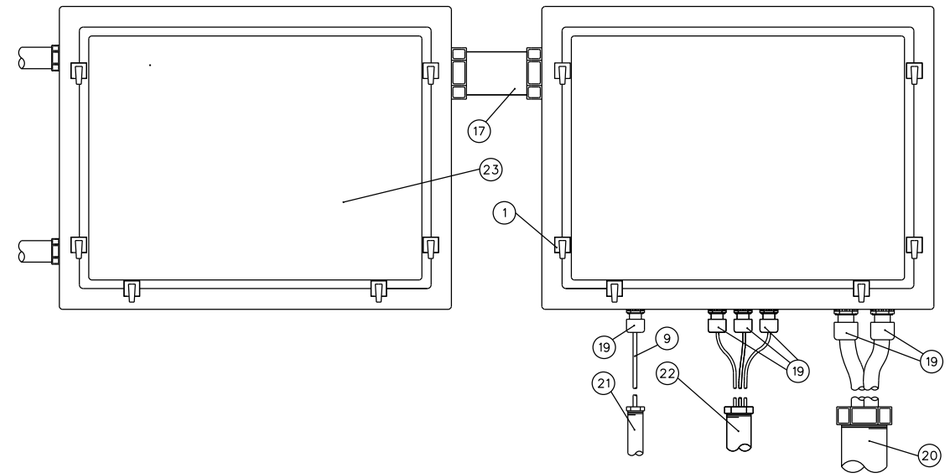

TYPICAL FACADE/CLUSTER MASTER TARGET DATA PANELS (MTDP) DETAIL

NOT TO SCALE

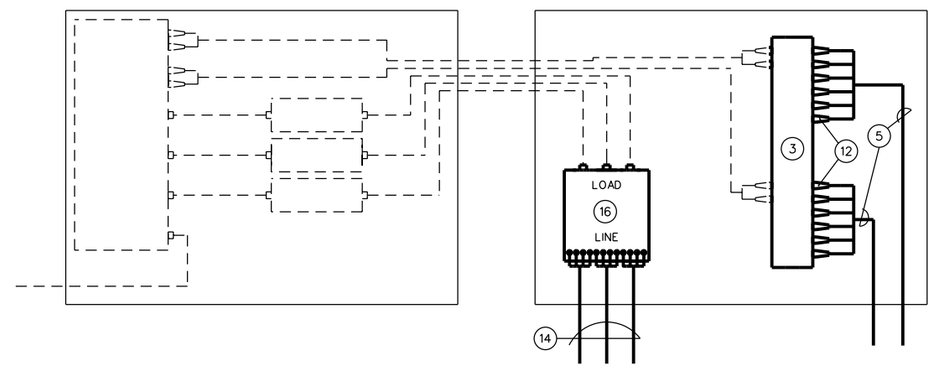

MTDP DATA WIRING SCHEMATIC

PROVIDED BY MCA CONTRACTOR

PROVIDED BY OPA CONTRACTOR

KEY NOTES

1. ENCLOSURE SHALL BE 16 GAUGE MINIMUM GALVANIZED STEEL SHEET METAL WITH WALL MOUNT BRACKETS. ENCLOSURE SHALL CARRY A NEMA 4 RATING AND BE TESTED BY UL OR OTHER APPROVED TESTING AGENCY. PROVIDE ENCLOSURE WITH FAST OPERATING CLAMP ASSEMBLY. BOLT TYPE CLAMPS ARE NOT ACCEPTABLE.
2. PROVIDE A STRAIN RELIEF BRACKET THAT IS SECURED IN PLACE UNDER THE CABLE SEAL FITTING LOCK NUT.
3. INJECTION-MOLDED PLASTIC CONNECTOR 12 PORT PATCH PANEL WITH SUPPORT BRACKETS FOR FIELD INSTALLABLE SC CONNECTORS.
4. METAL BACK PLATE TO SECURE COMPONENTS INSIDE ENCLOSURE.
5. 6-STRAND ARMORED TYPE FIBER OPTIC CABLE(S) WITH CENTRAL STRENGTH MEMBER. SECURE FIBER OPTIC CABLE CENTRAL MEMBER INSIDE MTDP ENCLOSURE.
6. METALLIC CABLE SHEATH GROUNDING CLAMP AND GROUNDING CONNECTOR, BOND CABLE ARMOR/SHIELD TO MTDP BACK PLATE GROUNDING BAR. ALL GROUND CABLES NOT SHOWN FOR CLARITY.
7. CENTRAL MEMBER STRAIN-RELIEF BRACKET.
8. GROUND BAR - SECURE TO METAL BACK PLATE.
9. #6 AWG BARE COPPER GROUNDING CONDUCTOR.
10. DATA PANEL RECEPTACLE (DPR) - 20 AMP, 125 VOLT, 2 POLE, 3 WIRE GROUNDING TYPE IN A STANDARD SINGLE-GANG METAL BOX AND GALVANIZED STEEL DEVICE PLATE. CONNECT DPR AHEAD OF GFCI MAINTENANCE RECEPTACLE TO AVOID NUISANCE TRIPPING.
11. 2/C #12 WITH GROUND TYPE "SO" CORD IN CONDUIT FROM CIRCUIT BREAKER LOADCENTER FOR 120 VOLT, 1-PHASE SERVICE TO DUPLEX RECEPTACLE. RECEPTACLE SHALL NOT BE FED FROM ANY GROUND FAULT INTERRUPTING DEVICE. PROVIDE MYERS HUB TYPE FITTING AT CONDUIT PENETRATION. ROUTE CABLE BEHIND BACKPLATE.
12. FIELD INSTALLABLE "SC" CONNECTORS WITH BEND PROTECTOR. ALL CONNECTORS NOT SHOWN FOR CLARITY.
13. FIBER OPTIC CABLE BUFFER TUBES WITH 6-STRANDS OF FIBER, EACH. PROVIDE 2' SLACK EACH END, COIL AROUND RADIUS CONTROL GUIDES.
14. DIRECT BURIAL GRADE CATEGORY 5E SHIELDED CABLES TO TARGET DATA PANEL (TDP). COIL 3' SLACK IN MTDP AT EACH END AND PROVIDE STRAIN RELIEF. BOND CABLE SHIELD TO MTDP BASE PLATE GROUNDING.
15. WALL MOUNTED SINGLE PANEL HOUSING FOR FIBER OPTIC CABLE TERMINATIONS. FIBER OPTIC BUFFER TUBE SLACK AND FAN OUT KIT SHALL BE CONTAINED WITHIN HOUSING. HOUSING SHALL BE COMPATIBLE WITH 12 PORT PATCH PANEL.
16. PROVIDE MODULAR JACK WITH 110 BLOCKS ON LINE SIDE AND RJ45 OUTLETS ON EQUIPMENT SIDE TO TERMINATE CAT 5E CABLES ENTERING OR EXITING ENCLOSURE.
17. 2' CONDUIT PROVIDED WITH MYERS TYPE HUBS FOR USE BY OTHERS.
18. MTDP SHALL HAVE A ROLLED FLANGE AROUND PERIMETER OF OPENING.
19. PROVIDE ONE CABLE SEAL FITTING FOR EACH CABLE. SEE "TYPICAL CABLE SEAL FITTING DETAIL," SHEET ED-01.
20. CONDUIT FOR FIBER OPTIC CABLES. STUB UP ABOVE SLAB AND SEAL WATERTIGHT WITH DUCT SEALANT - FOAM IS NOT ACCEPTABLE.
21. CONDUIT FOR #6 AWG, 600 VOLT GROUNDING CONDUCTOR TO TARGET EMPLACEMENT GROUND ROD. STUB CONDUIT UP ABOVE SLAB AND SEAL WATERTIGHT WITH DUCT SEALANT - FOAM IS NOT ACCEPTABLE.
22. CONDUIT WITH DIRECT BURIAL GRADE CAT 5E CABLES, SEE TARGET EMPLACEMENT PLAN AND ELEVATION. STUB CONDUIT UP ABOVE SLAB AND SEAL WATERTIGHT WITH DUCT SEALANT - FOAM IS NOT ACCEPTABLE.
23. HINGED COVER WITH CORROSION-RESISTANT STAINLESS STEEL CAPTIVE CLAMPS. HINGE MUST HAVE REMOVABLE PIN. PROVIDE A SEAMLESS FOAM-IN-PLACE GASKET FOR A WATERTIGHT AND DUST TIGHT SEAL.
24. FIBER OPTIC FAN-OUT KIT OR SPLICE KIT WITH PIGTAILS.

GENERAL NOTES

1. TERMINATE ALL FIBER OPTIC CABLES ENTERING OR LEAVING WITH "SC" CONNECTORS. ALL 6 STRANDS OF FIBER ARE REQUIRED TO BE TERMINATED AT EACH EMPLACEMENT.
2. PROVIDE CABLE IDENTIFICATION DIRECTORY ON INSIDE OF COVER.
3. LABEL ALL CABLES WITH ADHESIVE POLYETHYLENE WRAP AROUND LASER PRINTED LABELS INDICATING CABLE DESTINATION AND CABLE TYPE.
4. ENCLOSURES SHALL BOTH BE 16"W X 12"H X 6"D FOR SIT CLUSTER CONFIGURATION. FOR FACADE EMPLACEMENT ENCLOSURES SHALL BE 24"W X 12"H X 6"D AND 16"W X 12"H X 6"D RESPECTIVELY.
5. ALL COMPONENTS INSTALLED INSIDE MTDP ENCLOSURES SHALL BE SECURED BY MECHANICAL MEANS. ADHESIVES ARE NOT ALLOWED FOR SECURING COMPONENTS INSIDE MTDP ENCLOSURES.
6. CAT 5E DATA CABLES PROVIDE THE MINIMUM PERFORMANCE REQUIREMENTS FOR COPPER DATA CABLES. DATA CABLES THAT EXCEED CAT 5E PERFORMANCE REQUIREMENTS MAY BE USED AS LONG AS ALL PHYSICAL REQUIREMENTS SPECIFIED HEREIN ARE MAINTAINED.

US Army Corps of Engineers

Rev.	Description	Date	Approved
Rev. *			

Designed by: | Date: | Rev.
Dwn by: | Ckd by: | Design file no. | Drawing code:
Reviewed by: | File name: | Plot scale:
Submitted by: | Plot date:

U.S. ARMY ENGINEERING AND SUPPORT CENTER, HUNTSVILLE
HUNTSVILLE, ALABAMA

JUNE 2015

RANGE AND TRAINING LAND PROGRAM
STANDARD DESIGN MANUAL
FACADE/CLUSTER MASTER TARGET DATA PANEL
ELECTRICAL DETAILS

Sheet reference number: ED-08

Sheet ___ of