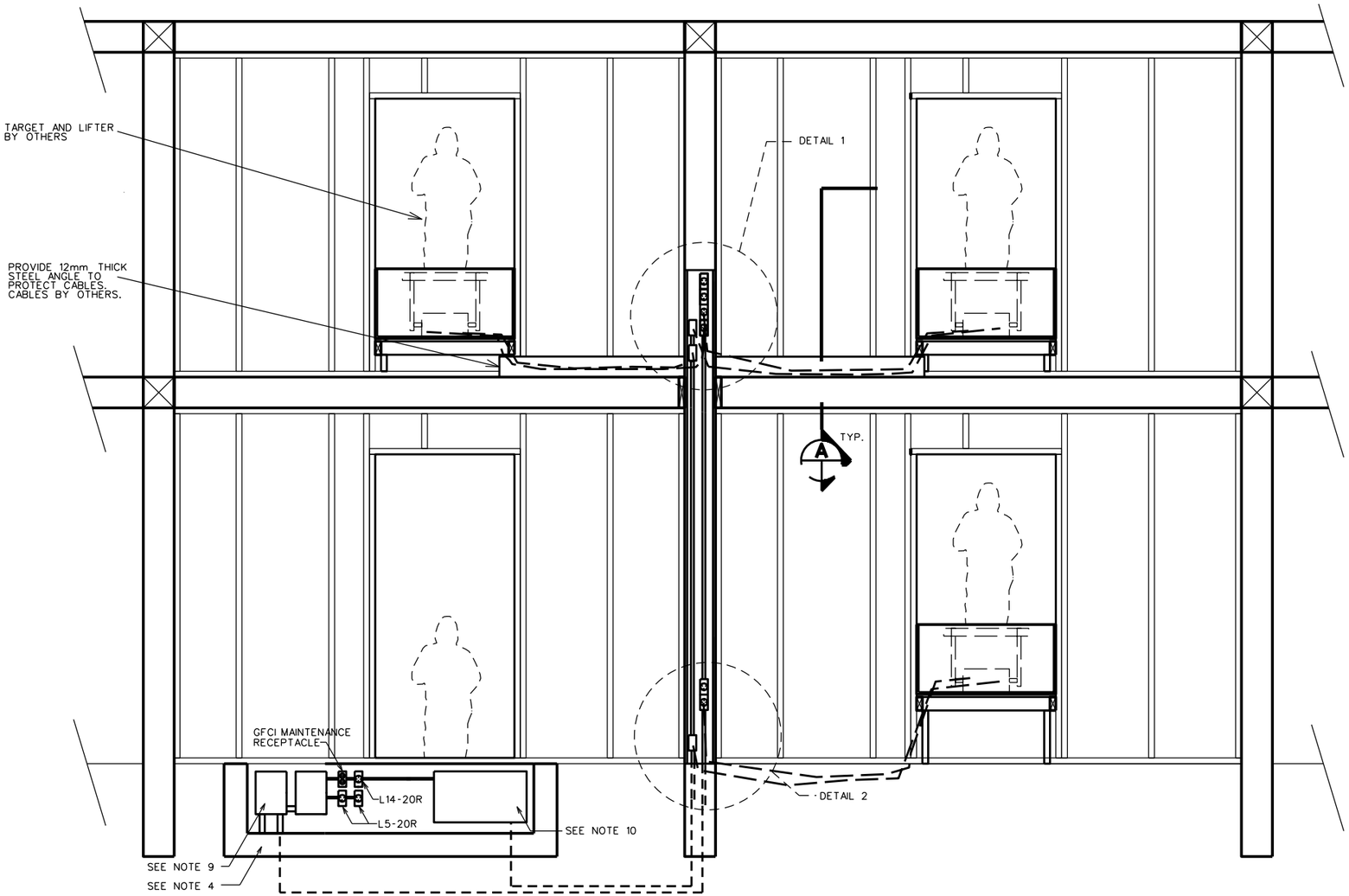

TYPICAL REAR ELEVATION

SCALE : N.T.S.

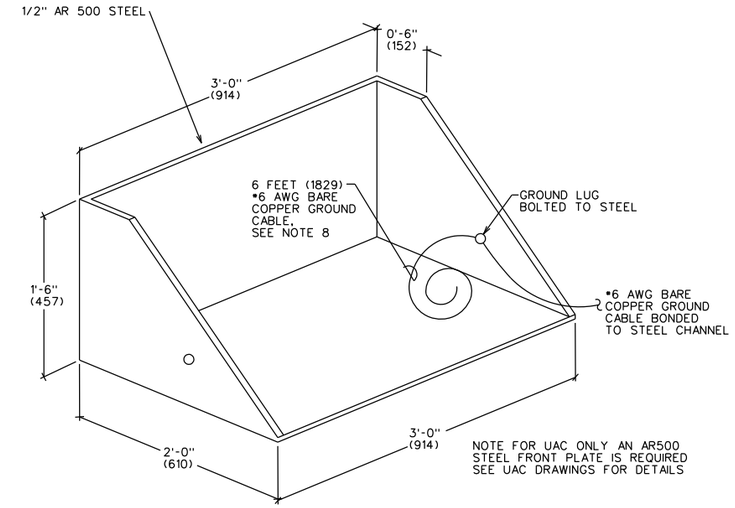

STEEL TARGET EMPLACEMENT

SCALE : N.T.S.

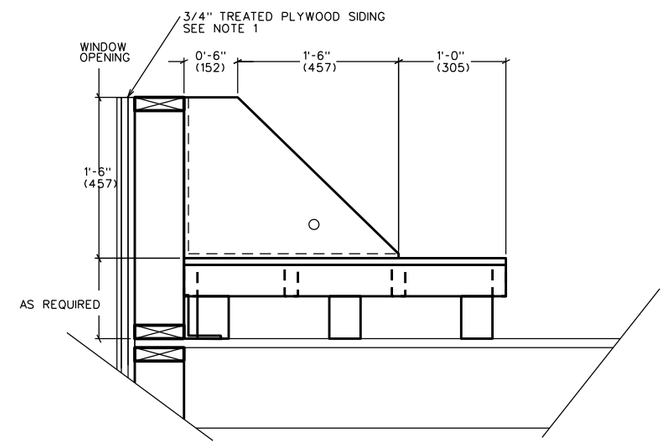

SECTION A

SCALE : N.T.S.

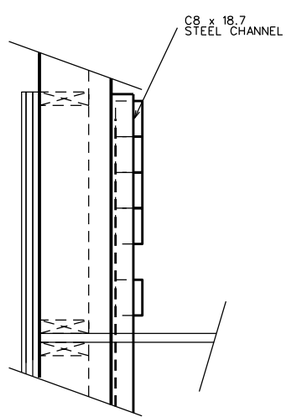

SECTION B

SCALE : N.T.S.

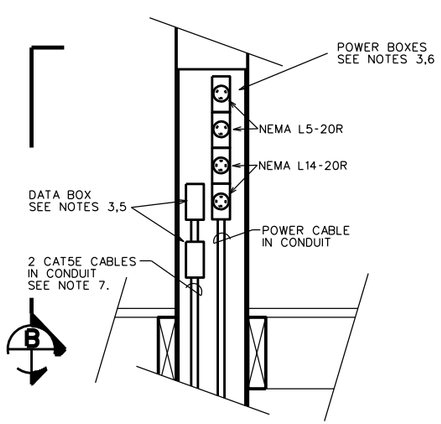

DETAIL 1

SCALE : N.T.S.

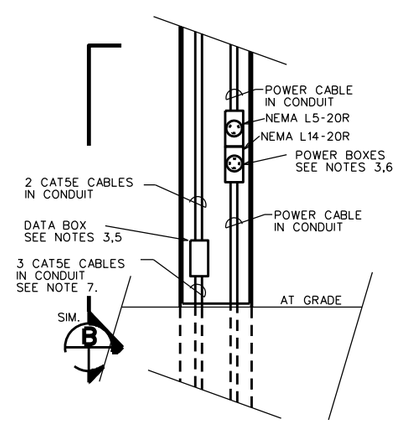

DETAIL 2

SCALE : N.T.S.

NOTES:

1. FOR UAC GRENADIER GUNNERY FACADE PROVIDE AN ADDITIONAL 6mm TO 12mm THICK, UV LIGHT AND OZONE RESISTANT, RUBBER MATTING ("LINATEX OZ", "RUMBER", OR SIMILAR) ON THE FACE OF FRONT FACADE TO PREVENT SHATTERING OF THE WOOD FROM THE IMPACT OF THE GRENADES
2. SEE FAC-1-02 OR UAC-A-03 FOR INFORMATION NOT SHOWN
3. PROVIDE WEATHERPROOF EXTERIOR ENCLOSURES MOUNTED 305 AFG FOR FIRST FLOOR, 305 ABOVE PLATFORM ON SECOND FLOOR. PROVIDE CONDUIT SEAL WHEN CONDUIT ENTERS ENCLOSURES FROM THE TOP.
4. PROVIDE STANDARD DOUBLE SIT EMPLACEMENT BEHIND THE DOOR IN THE FACADE. INSTALL TWO 8 CIRCUIT PANELS TO PROVIDE POWER TO TARGET RECEPTACLES.
5. PROVIDE RJ45 MALE CONNECTION IN DATA BOX ON FIRST FLOOR. PROVIDE TWO RJ45 CONNECTIONS IN DATA BOXES ON SECOND FLOOR. PROVIDE 6"-12" CABLE COILED IN ENCLOSURE WITH BLANK COVER FOR CONNECTION TO GOVERNMENT PROVIDED AND INSTALLED FEMALE DATA CONNECTOR.
6. PROVIDE NEMA L14-20R AND NEMA L5-20R RECEPTACLE IN POWER BOXES EACH WITH WEATHERPROOF IN-USE COVERS. THE NEMA L14-20R AND NEMA L5-20R RECEPTACLES SHALL BE POWERED VIA CIRCUIT FROM THE LOADCENTER IN THE SIT EMPLACEMENT.
7. EACH CAT5E CABLE IS HOMERUNNED TO THE MASTER TARGET DATA PANEL IN THE SIT EMPLACEMENT.
8. BOND A 6 FOOT #6 AWG TO THE STEEL TARGET HOUSING LEAVING THE OTHER END COILED IN THE TARGET HOUSING FOR FUTURE CONNECTION TO TARGET MECHANISM. BOND EACH STEEL TARGET HOUSING TO THE STEEL CHANNEL USING A MINIMUM #6 AWG BARE COPPER GROUND CABLE. BOND THE STEEL CHANNEL TO THE TARGET GROUND ROD LOCATED IN THE SIT EMPLACEMENT BEHIND THE FACADE DOOR LOCATION USING A MINIMUM #6 AWG BARE COPPER GROUND CABLE.
9. EACH L14-20R TARGET RECEPTACLE SHALL BE INSTALLED ON DEDICATED CIRCUITS.
10. INSTALL 12" X 24" MTDP. PROVIDE 120V DUPLEX RECEPTACLE AS SHOWN ON SIT EMPLACEMENT DETAIL.

US Army Corps of Engineers

Rev.	Description	Date	Approved

Designed by: | Date: | Rev.
Dwn by: | Ckd by: | Design file no.
Reviewed by: | Drawing code:
Submitted by: | File name: Dwg code: Pkg code:

U. S. ARMY ENGINEERING AND SUPPORT CENTER, HUNTSVILLE
HUNTSVILLE, ALABAMA

17 MAY 2013

RANGE AND TRAINING LAND PROGRAM
STANDARD DESIGN MANUAL

FACADE EMPLACEMENT DETAILS

Sheet reference number:
FAC-A-01