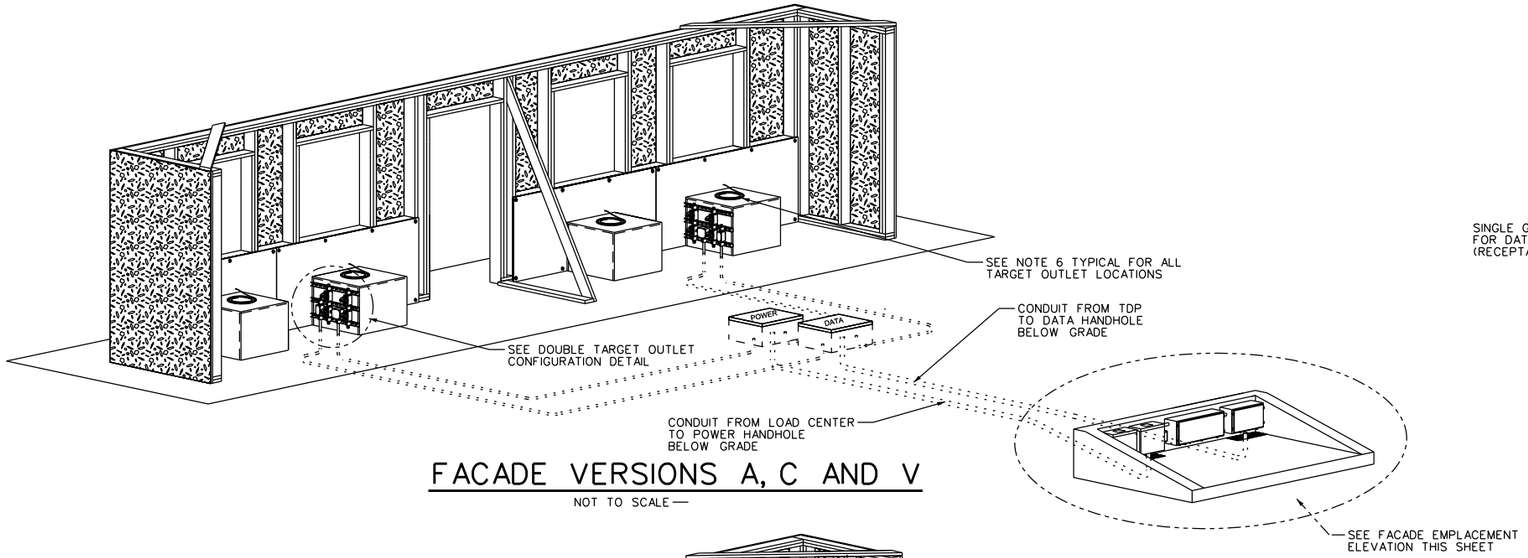

FACADE VERSIONS A, C AND V

NOT TO SCALE

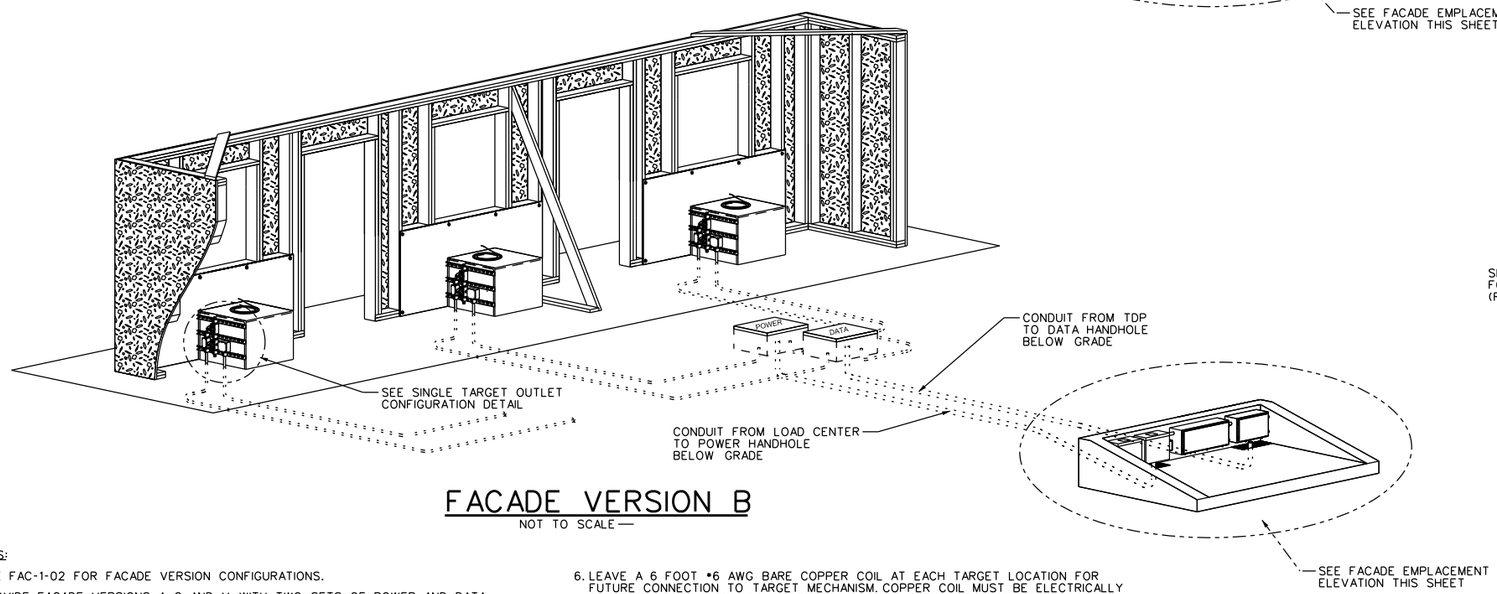

FACADE VERSION B

NOT TO SCALE

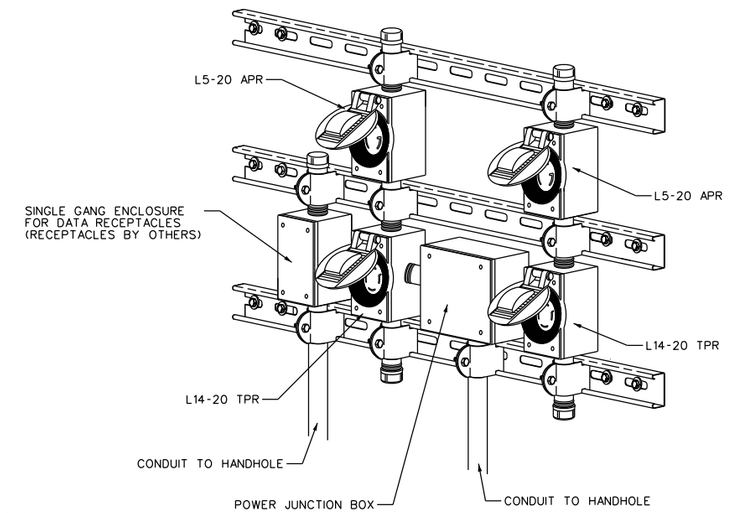

DOUBLE TARGET OUTLET CONFIGURATION

NOT TO SCALE

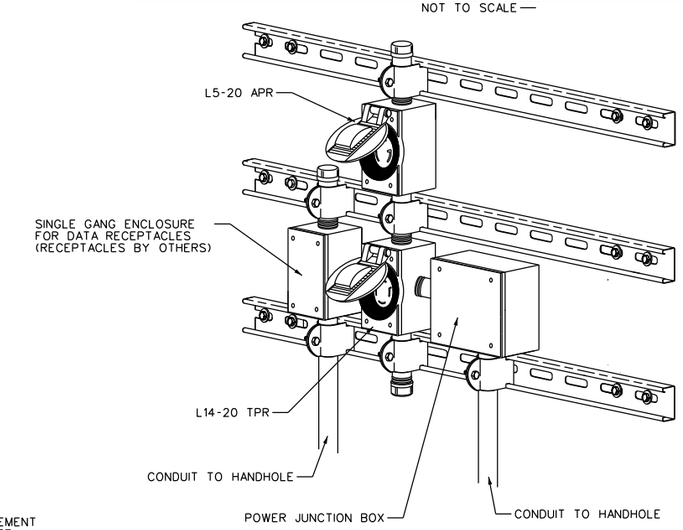

SINGLE TARGET OUTLET CONFIGURATION

NOT TO SCALE

NOTES:

1. SEE FAC-1-02 FOR FACADE VERSION CONFIGURATIONS.
2. PROVIDE FACADE VERSIONS A, C, AND V WITH TWO SETS OF POWER AND DATA OUTLETS IN THE DOUBLE TARGET OUTLET CONFIGURATION. PROVIDE FACADE VERSION B WITH THREE SETS POWER AND DATA OUTLETS IN THE SINGLE TARGET OUTLET CONFIGURATION.
3. CONNECT SIT, HAND HOLES AND POWER AND DATA OUTLETS WITH UNDERGROUND CONDUIT AS SHOWN. INSTALL TWO, EIGHT-CIRCUIT LOAD CENTERS: ONE 12"X24" MTDP; AND ONE 12"X16" TDP IN THE WSIT AS SHOWN.
4. ALL DATA CABLES ROUTED TO THE FACADE AND OTHER EMPLACEMENTS SHALL BE TERMINATED INSIDE THE TDP IN THE FACADE EMPLACEMENT. EACH CAT 5E OR BETTER CABLE SHALL BE PROVIDED WITH SURGE PROTECTION INSIDE THE TDP. THE MTDP SHALL BE DEDICATED FOR TARGET NETWORKING EQUIPMENT. PROVIDE MTDP WITH DATA POWER RECEPTACLE AND GROUND LUGS ON BACK PLATE, LOCATED TO ALLOW MAXIMUM SPACE FOR TARGET NETWORKING EQUIPMENT.
5. SEE SHEET ED-06 FOR MTDP REQUIREMENTS AND SHEET ED-07 FOR TDP REQUIREMENTS.
6. LEAVE A 6 FOOT #6 AWG BARE COPPER COIL AT EACH TARGET LOCATION FOR FUTURE CONNECTION TO TARGET MECHANISM. COPPER COIL MUST BE ELECTRICALLY CONTINUOUS TO GROUNDING ELECTRODE IN WSIT EMPLACEMENT BEHIND FACADE. GROUNDING PATHWAY MUST BE VIA #6 AWG COPPER GROUND CABLE.
7. ALL L14-20R AND L5-20R TARGET OUTLETS SHALL BE PROVIDED IN WET LOCATION COVERS AS SHOWN IN RECEPTACLE WET LOCATION COVER DETAIL ON SHEET ED-01.
8. PROVIDE A MALE RJ45 CONNECTOR ON THE END OF EACH CAT 5E OR BETTER DATA CABLE INSTALLED IN OUTLET BOXES. PROVIDE BOXES WITH BLANK FACE PLATE. (GOVERNMENT WILL PROVIDE AND INSTALL DATA CONNECTOR IN OUTLET FACEPLATE). PROVIDE 6" TO 12" OF CABLE BEHIND FACE PLATE TO ALLOW FOR CONNECTION OF DATA CABLE TO FUTURE DATA CONNECTOR.
9. PROVIDE GROUNDING FOR FACADE EMPLACEMENT DETAIL AS SHOWN IN EMPLACEMENT GROUNDING DETAIL ON SHEET ED-01. PROVIDE A #6 AWG COPPER GROUND CONNECTION BETWEEN MTDP AND TDP.

PANEL BOARD: PB-F1xx LOCATION: XXXXXXX MOUNTED: SURFACE FEED: BOTTOM
100 MINIMUM MAIN LUGS ONLY ASYM A.I.C. MIN.:10,000
VOLTAGE: 240/120 PHASE: 1 WIRE: 3 RATING: NEMA 3R

LOAD SERVED	NO. POLES	TRIP AMPS	WIRE SIZE	VA/ PHASE A	VA/ PHASE B	CKT NO.	CKT. NO.	VA/ PHASE A	VA/ PHASE B	WIRE SIZE	TRIP AMPS	NO. POLES	LOAD SERVED
SURGE ARRESTOR	2	—	—	—	—	1	2	1920	1920	12	20	2	PANEL BOARD PB-F2XX
FEED THRU PROVISIONS	2	—	—	—	—	5	6	50	—	12	20	1	DPR AND MR
							8	—	—	—	20	1	SPARE
				0	0			1970	1920				

TOTAL VA PHASE: A: 1970
TOTAL VA PHASE: B: 1920

TOTAL CONNECTED WATTAGE: 3890
95% DEMAND WATTAGE: xxx

SUPPLIED FROM: TRSF-XX TOTAL DEMAND AMPS: xx

PANEL BOARD: PB-F2xx LOCATION: XXXXXXX MOUNTED: SURFACE FEED: BOTTOM
100 MINIMUM MAIN LUGS ONLY ASYM A.I.C. MIN.:10,000
VOLTAGE: 240/120 PHASE: 1 WIRE: 3 RATING: NEMA 3R

LOAD SERVED	NO. POLES	TRIP AMPS	WIRE SIZE	VA/ PHASE A	VA/ PHASE B	CKT NO.	CKT. NO.	VA/ PHASE A	VA/ PHASE B	WIRE SIZE	TRIP AMPS	NO. POLES	LOAD SERVED
SIT (NEMA L14-20R, NEMA L5-20R)	2	20	12	480	480	1	2	480	480	12	20	2	SIT (NEMA L14-20R, NEMA L5-20R)
SIT (NEMA L14-20R, NEMA L5-20R)	2	20	12	480	480	5	6	480	480	12	20	2	SIT (NEMA L14-20R, NEMA L5-20R)
				960	960		8	960	960				

TOTAL VA PHASE: A: 1920
TOTAL VA PHASE: B: 1920

TOTAL CONNECTED WATTAGE: 3840
95% DEMAND WATTAGE: xx

SUPPLIED FROM: PB-F1xx TOTAL DEMAND AMPS: xx

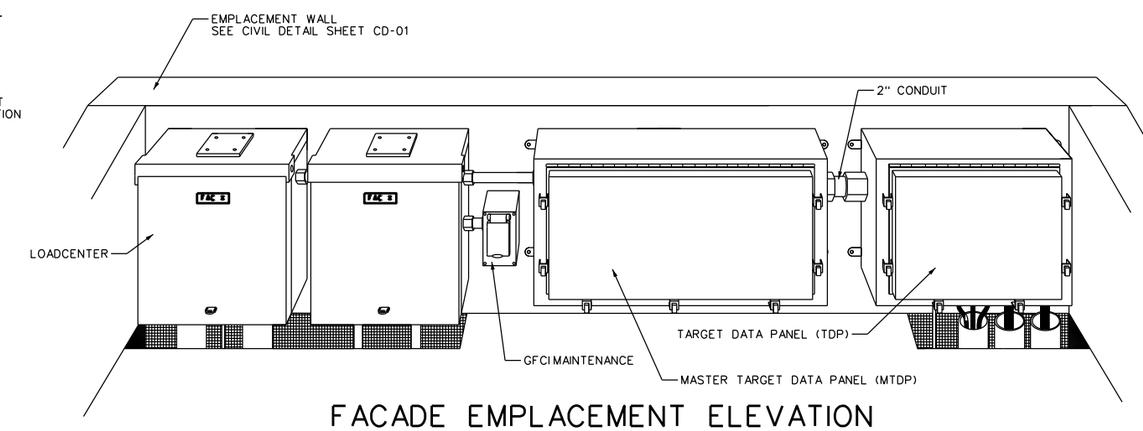

FACADE EMPLACEMENT ELEVATION

NOT TO SCALE

US Army Corps of Engineers

Rev. #	Description	Date	Approved

Designed by: Date: Rev.
Dwn by: Ckd by: Design file no.
Reviewed by: Drawing code:
Submitted by: File name: Par number: Pkg code:

U. S. ARMY ENGINEERING AND SUPPORT CENTER, HUNTSVILLE
HUNTSVILLE, ALABAMA

JANUARY 2015

RANGE AND TRAINING LAND PROGRAM
STANDARD DESIGN MANUAL

FACADE ELECTRICAL DETAILS

Sheet reference number:
FAC-E-01