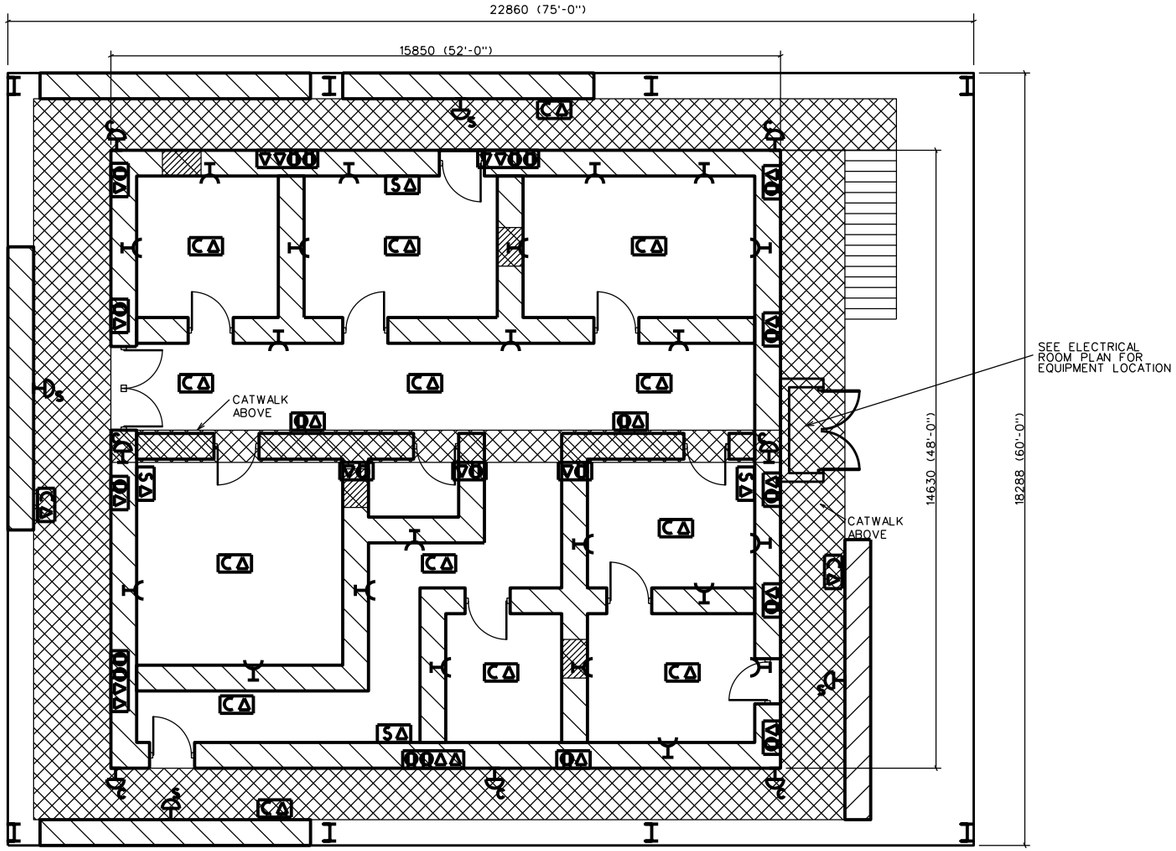

SHOOT HOUSE - TARGET OUTLET PLAN

SHOOT HOUSE NOTES:

1. ROUTE WIRE FOR POWER AND DATA TO UNIVERSAL TARGET OUTLETS UNDER THE CATWALK.
2. MOUNT THE CAMERA AND SPEAKER OUTLETS TO THE ROOF STRUCTURE AND MOUNT FOUR CAMERA OUTLETS UNDER THE CATWALK.
3. INSTALLATION OF TARGETS, CAMERAS, AND SPEAKERS BY OTHERS.
4. THE ELECTRICAL ROOM SHALL BE SEALED TO PREVENT WATER FROM ENTERING THE ROOM, AND SHALL BE CONSTRUCTED TO MINIMIZE DUST FROM ENTERING THE ROOM.
5. SAND FLOORS ARE NOT ALLOWED IN ELECTRICAL ROOM.
6. FIBER OPTIC CABLE ROUTED FROM THE AFTER ACTION REVIEW FACILITY SHALL BE TERMINATED IN THE DATA ENCLOSURE LOCATED IN THE ELECTRICAL ROOM.
7. LIGHTING PLAN NOT SHOWN ON THIS LAYOUT. TYPE OF LIGHTING FIXTURES USED SHALL BE DETERMINED BASED ON LOCAL ENVIRONMENTAL CONDITIONS AT THE SITE THE SHOOTHOUSE IS CONSTRUCTED. LIGHTS SHALL BE INSTALLED SUCH THAT THEY DO NOT INTERFERE WITH THE CAMERA SYSTEM THAT WILL BE MOUNTED TO THE ROOF STRUCTURE BY OTHERS. CONSIDERATION SHOULD BE GIVEN TO THE MOUNTING OF THE FIXTURES TO ALLOW FOR WINDY CONDITIONS THAT MAY BE PRESENT AT SOME LOCATIONS.
8. INSTALL LIGHTING CONTACTOR IN AN ENCLOSURE IN THE ELECTRICAL ROOM. THE INSTALLATION SHALL BE DONE IN ACCORDANCE WITH THE NEC. PROVIDE WITH A HAND-OFF-AUTO SWITCH TO ALLOW FOR BOTH LOCAL AND REMOTE CONTROL OF CONTACTOR.
9. LIGHTNING PROTECTION SHALL BE PROVIDED IN ACCORDANCE WITH NFPA 780.

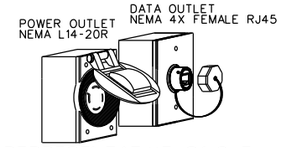

REPRESENTATIVE SINGLE TARGET OUTLET
SCALE: NOT TO SCALE

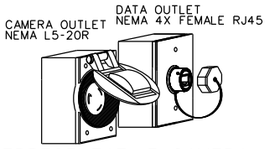

REPRESENTATIVE CAMERA/ SPEAKER OUTLET
SCALE: NOT TO SCALE

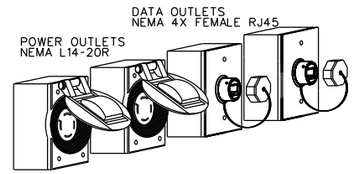

Representative Double Target Outlet
SCALE: NOT TO SCALE

BULLET ABSORBING WALL PANEL

CATWALK

SINGLE TARGET OUTLET

DOUBLE TARGET OUTLET

CAMERA OUTLET

SPEAKER OUTLET

TARGET CABLE SUPPORT

PANIC BUTTON BOX:
C - BOX INSTALLED 48" ABOVE CATWALK,
S - BOX INSTALLED 48" AFF IN SHOOTHOUSE

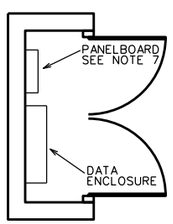

ELECTRICAL ROOM PLAN

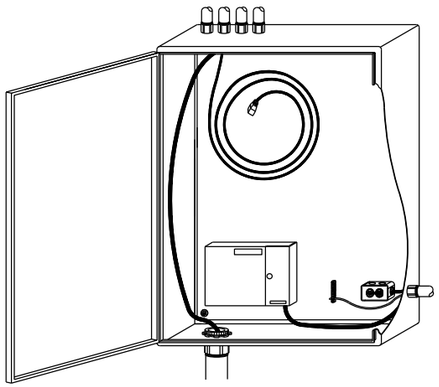

DATA ENCLOSURE

DATA ENCLOSURE NOTES:

1. DATA ENCLOSURE SHALL BE NEMA 4 RATED AND MAINTAIN NEMA RATING AFTER INSTALLATION.
2. DATA ENCLOSURE SHALL BE 4' HIGH X 3' WIDE X 10" DEEP.
3. FIBER OPTIC PATCH PANEL, MAXIMUM SIZE 9.5" HIGH X 13.5" WIDE.
4. 120V, 20A DUPLEX RECEPTACLE.
5. 2 METER SERVICE LOOP SHALL BE PROVIDED FOR ALL CABLES TERMINATING IN ENCLOSURE.
6. ROUTE SERVICE LOOP AROUND INSIDE PERIMETER OF ENCLOSURE.
7. ALL CABLES SHALL BE PERMANENTLY LABELED STATING CABLE DESTINATION.
8. METALLIC BACKPLATE SHALL BE INSTALLED THAT COMPLETELY COVER REAR OF ENCLOSURE. ALL COMPONENTS SHALL BE MOUNTED TO THIS BACKPLATE.
9. GROUND BACKPLATE WITH #6 AWG CU CONDUCTOR.
10. FIBER OPTIC TERMINATIONS SHALL BE MADE WITH SC CONNECTORS.
11. ENCLOSURE SHALL BE PROVIDED WITH A HINGED AND LOCKABLE DOOR.
12. REMAINING SPACE IN DATA ENCLOSURE SHALL BE USED FOR EQUIPMENT TO BE INSTALLED BY OTHERS.
13. 12 STRAND FIBER OPTIC CABLE INSTALLED BETWEEN DATA ENCLOSURE AND WALL MOUNTED FIBER PATCH PANEL IN AAR.
14. INSTALL CAT6 UTP CABLES FROM TARGET, SPEAKER, AND CAMERA OUTLETS INTO THE DATA ENCLOSURE. COIL 3FT AND TERMINATE WITH MALE RJ-45 CONNECTOR.

US Army Corps of Engineers

Rev.	Description	Date	Approved
*			

Designed by: | Date: | Rev.
Dwn by: | Ckd by: | Design file no.
Reviewed by: | Drawing code:
Submitted by: | File name: / Plot scale: / Plot date:

U. S. ARMY ENGINEERING AND SUPPORT CENTER, HUNTSVILLE
HUNTSVILLE, ALABAMA

JANUARY 2015

RANGE AND TRAINING LAND PROGRAM
STANDARD DESIGN MANUAL
FCC- 17879
LIVE FIRE EXERCISE SHOOTHOUSE

Sheet reference number:
SHH-E-1