CORPS OF ENGINEERS

U. S. ARMY

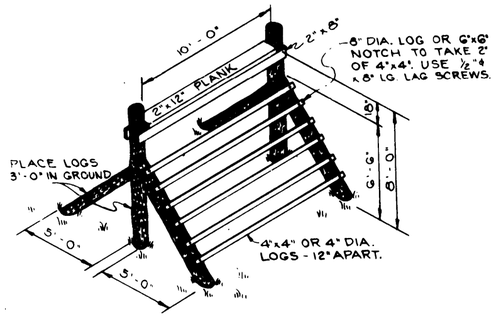

JUMP & LAND

SCALE: ¼" = 1'-0"
(RED # 3)

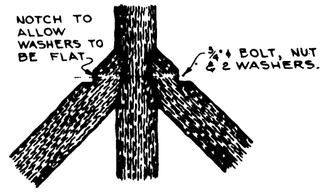

CONNECTION DETAIL
SCALE: 1" = 1'-0"
DETAIL APPLIES TO "JUMP & LAND" AND "CONFIDENCE CLIMB"

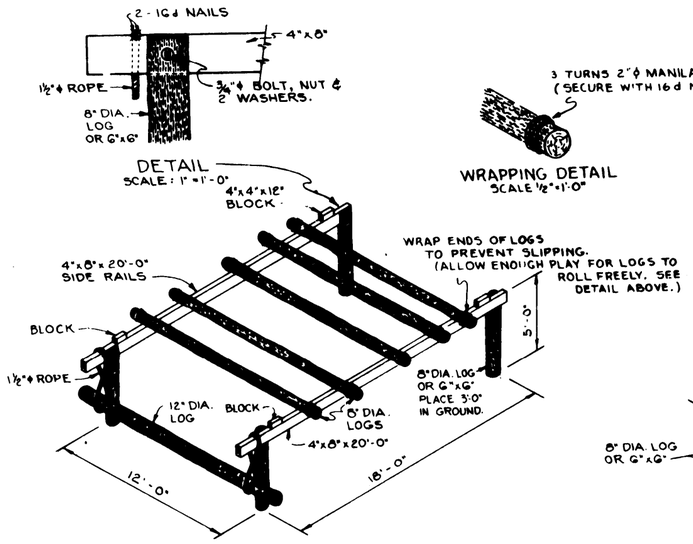

BELLY ROBBER

SCALE: ¼" = 1'-0"
(RED # 5)

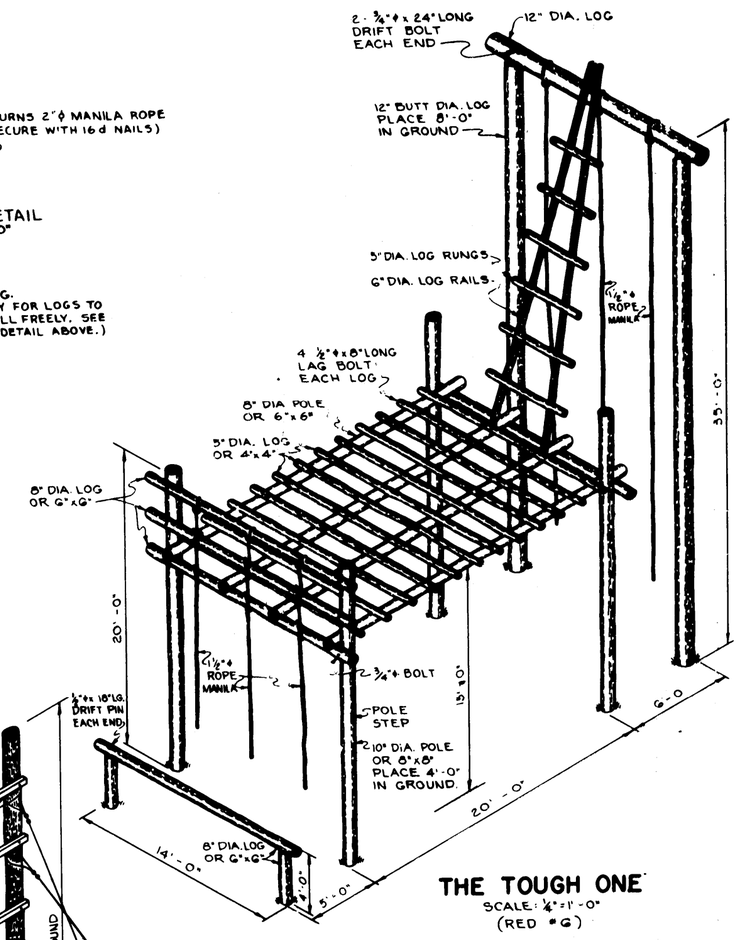

THE TOUGH ONE

SCALE: ¼" = 1'-0"
(RED # 6)

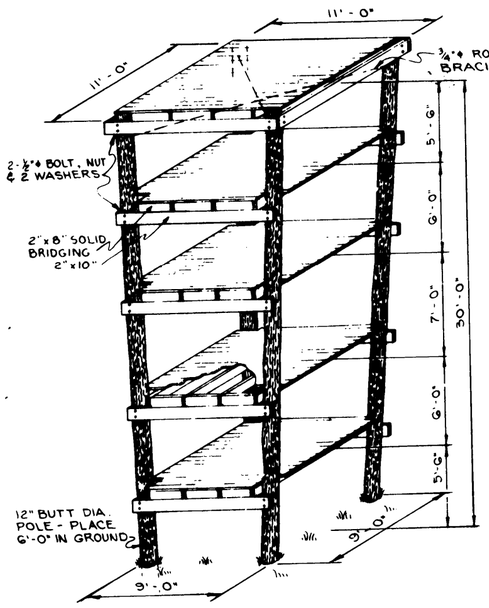

SKYSCRAPER

SCALE: ¼" = 1'-0"
(RED # 2)

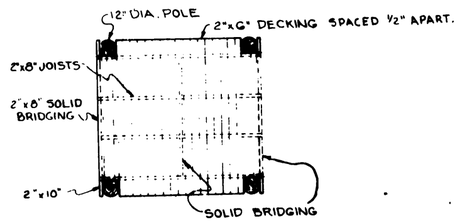

FRAMING PLAN
SCALE: ¼" = 1'-0"

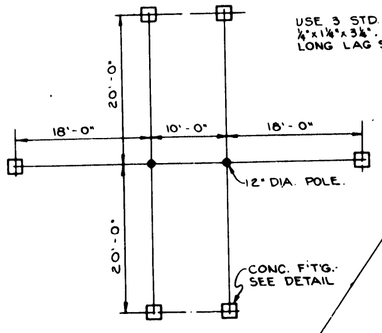

PLAN
SCALE: 1/16" = 1'-0"

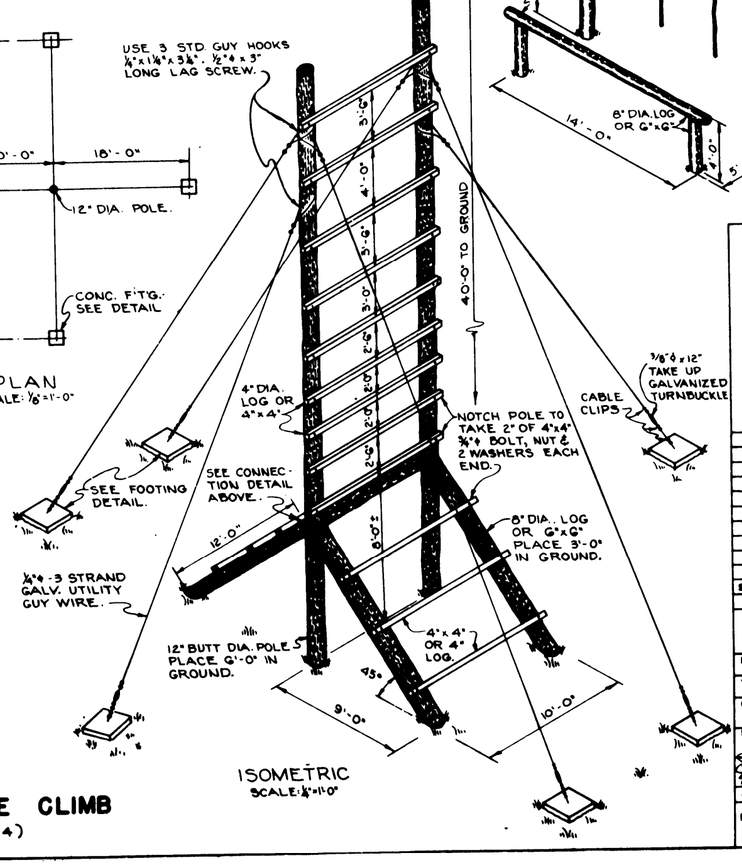

ISOMETRIC
SCALE: ¼" = 1'-0"

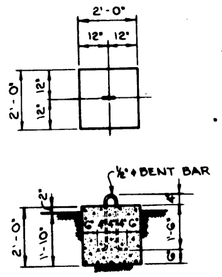

FOOTING DETAIL
SCALE: ½" = 1'-0"

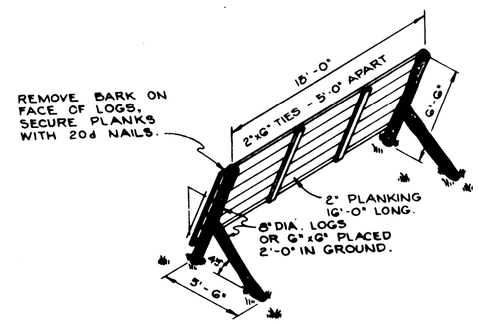

INCLINING WALL

SCALE: ¼" = 1'-0"
(RED # 1)

CONFIDENCE CLIMB

(RED # 4)

GRAPHIC SCALES

¼" = 1'-0" : 0, 5', 10', 15', 20'
½" = 1'-0" : 0, 1', 2', 3', 4', 5', 10'
1" = 1'-0" : 0, 1', 2', 3', 4, 5'

SYMBOL	DESCRIPTION	DATE	APPROVAL

REVISIONS

JOHN S. McGAUGHY ASSOCIATES
CONSULTING ENGINEERS
NORFOLK 7, VIRGINIA

DEPARTMENT OF THE ARMY
OFFICE OF THE CHIEF OF ENGINEERS
MILITARY CONSTRUCTION - ENGINEERING DIV.
WASHINGTON, D. C.

DRAWN BY: H.L.R.
TRACED BY: H.L.R.
CHECKED BY: J.A.R.
SUBMITTED: JOHN S. McGAUGHY ASSOCIATES CONSULTING ENGINEERS
APPROVED:
APPROVED FOR NORTH ATLANTIC AREA, ARMY FIELD FORCES
DATE: 6 FEBRUARY 1956

TRAINING FACILITIES
CONFIDENCE COURSE
RED QUADRANT
DETAILS

DATE: 30 FEB 1952
SCALE AS SHOWN
SPEC. NO.
DRAWING NUMBER 28-13-95
SHEET 2 OF 3

CAUTION: After using chemical correction fluid on photographic linen, swab or rinse eradicated area with clean water.