CAUTION: After using chemical correction fluid on photographic linen, wash or rinse eradicated area with clean water.

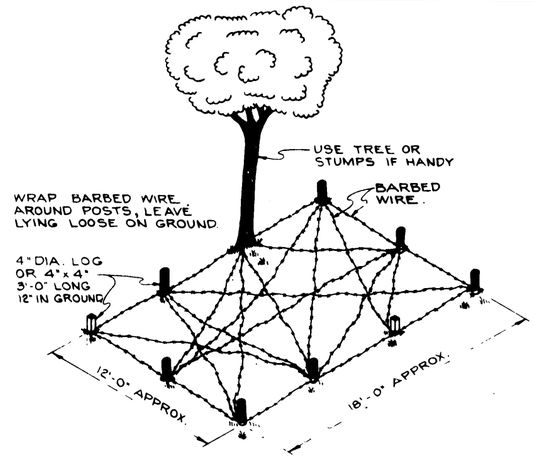

LOW WIRE
SCALE: 1/4" = 1'-0"
(BLACK # 21)

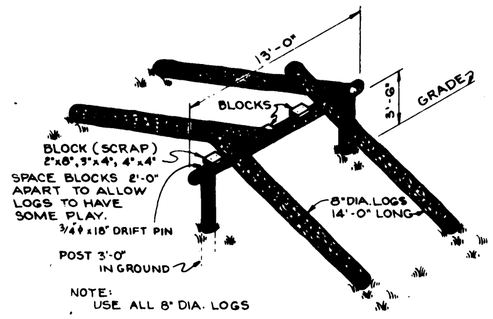

EASY BALANCER
SCALE: 1/4" = 1'-0"
(BLACK # 24)

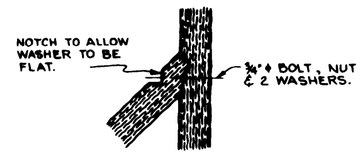

CONNECTION DETAIL
SCALE: 1" = 1'-0"

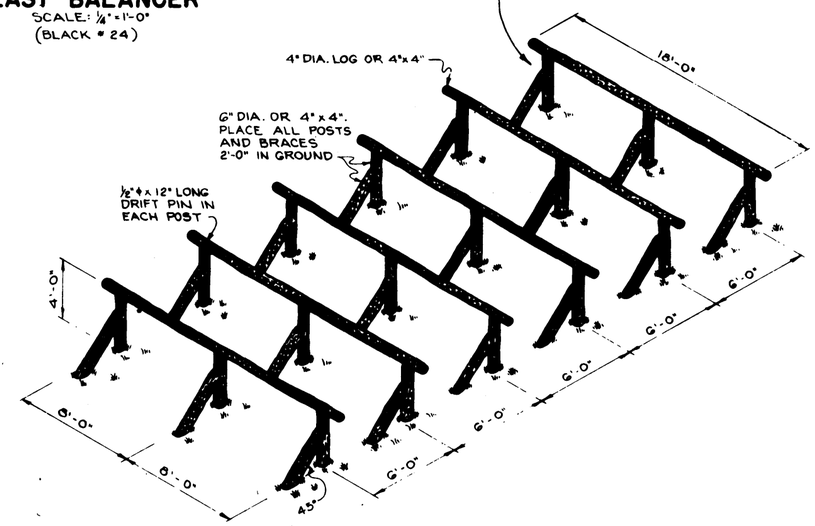

SIX VAULTS
SCALE: 1/4" = 1'-0"
(BLACK # 23)

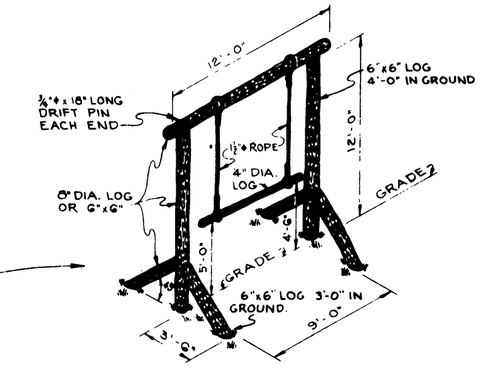

SWINGER
SCALE: 1/4" = 1'-0"
(BLACK # 20)

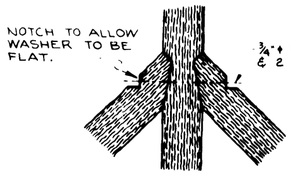

CONNECTION DETAIL
SCALE: 1" = 1'-0"

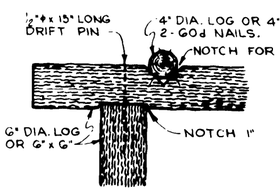

CONNECTION DETAIL
SCALE: 1 1/2" = 1'-0"

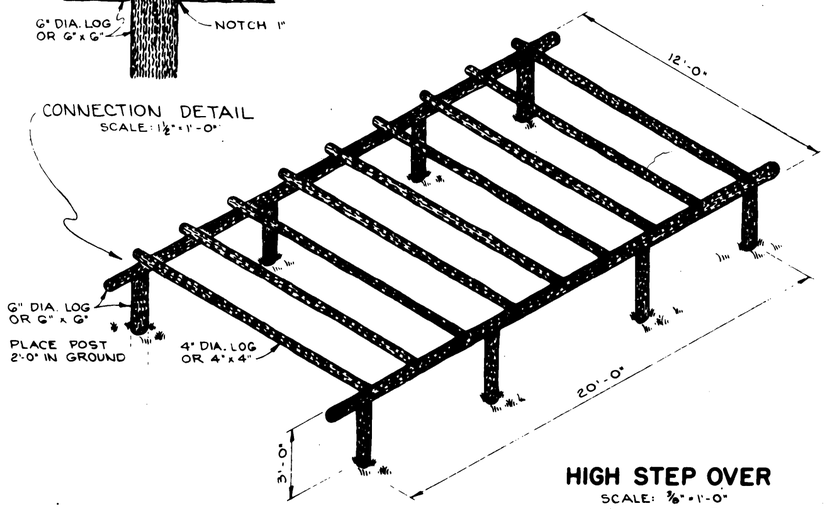

HIGH STEP OVER
SCALE: 3/8" = 1'-0"
(BLACK # 19)

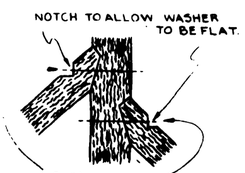

DETAIL "X"
NOT TO SCALE

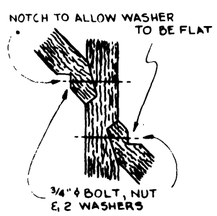

DETAIL "Y"
NOT TO SCALE

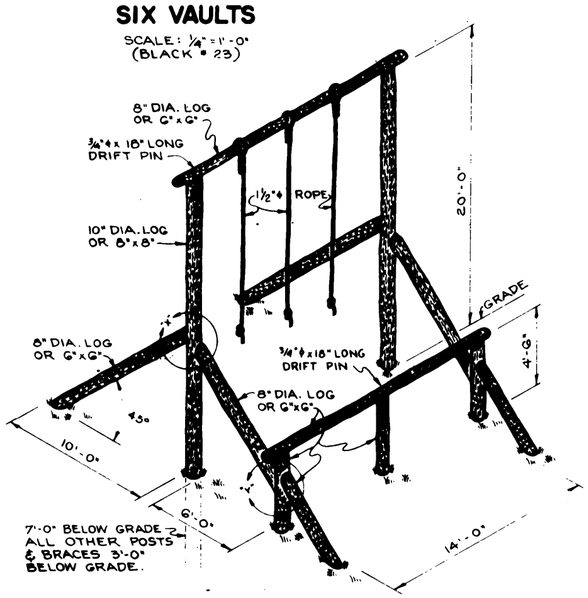

SWING, STOP & JUMP
SCALE: 1/4" = 1'-0"
(BLACK # 22)

GRAPHIC SCALES

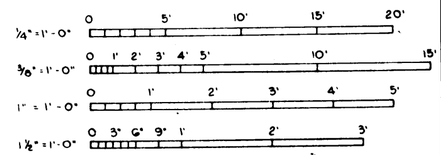

SYMBOL	DESCRIPTION	DATE	APPROVAL

REVISIONS

JOHN B. McGAUGHY ASSOCIATES
CONSULTING ENGINEERS
NORFOLK 7, VIRGINIA

DEPARTMENT OF THE ARMY
OFFICE OF THE CHIEF OF ENGINEERS
MILITARY CONSTRUCTION - ENGINEERING DIV.
WASHINGTON, D. C.

DRAWN BY: W.C.O.
TRACED BY: H.L.R.
CHECKED BY: J.A.R.
SUBMITTED: JOHN B. McGAUGHY ASSOCIATES CONSULTING ENGINEERS
APPROVED: CHIEF STRUCTURES BRANCH
APPROVED: CHIEF, CONSTRUCTION DIVISION
APPROVED FOR OFFICE CHIEF, ARMY FIELD FORCES
BY: COLONEL C.E., ENGINEER, OCAFF
DATE: 5. FEBRUARY 1952

TRAINING FACILITIES

CONFIDENCE COURSE
BLACK QUADRANT
DETAILS

DATE: 28 FEB. 1952
SCALE AS SHOWN
SPEC NO.
DRAWING NUMBER 28-13-95
SHEET 5 OF 5