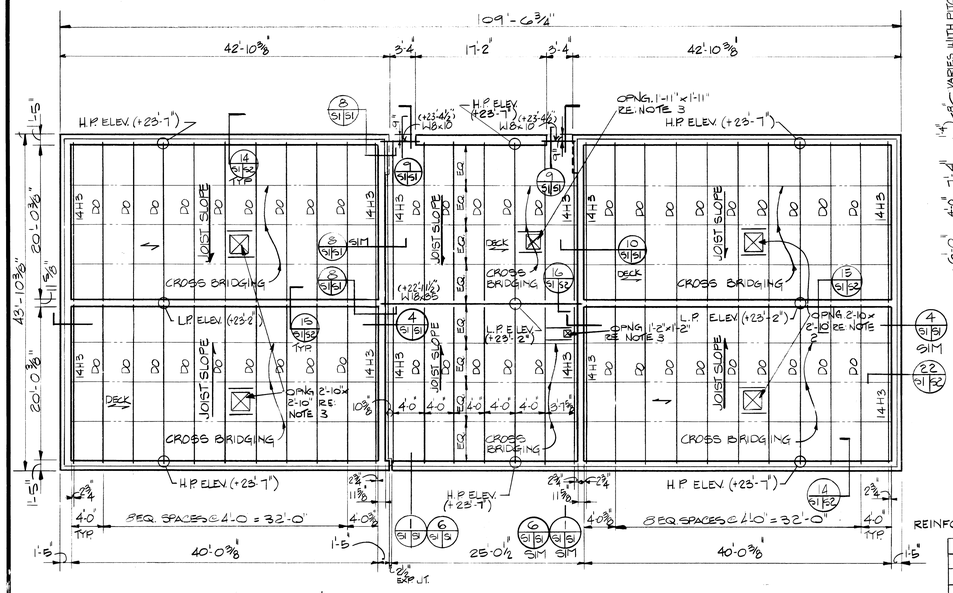

ROOF FRAMING PLAN

1. SCALE: 1/8" = 1'
2. ALL ELEVATIONS ARE TO TOP OF STRUCTURAL STEEL TOP OF WALL MEASURED FROM FINISHED LOWER LEVEL.
3. PROVIDE MISC. L 3 1/2 x 2 1/2 x 1/4 (LLV) FRAMING AROUND ALL ROOF & FLOOR OPNGS. LARGER THAN 10" x 10", RE ARCH DWGS FOR LOCATIONS.

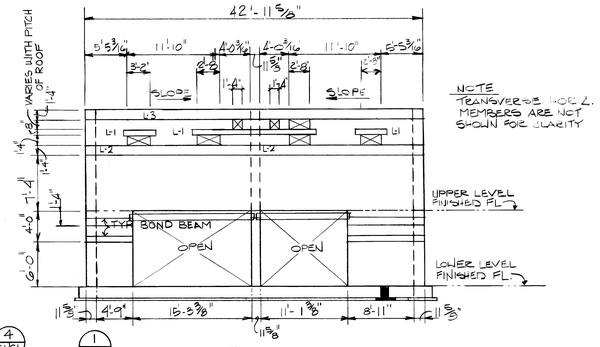

NOTE
TRANSVERSE HOR. L. MEMBERS ARE NOT SHOWN FOR CLARITY

SEE DET. 6/S1 FOR VERTICAL REINF.

SIM 1/S1 OPP. HAND

WALL HORIZONTAL REINFORCING

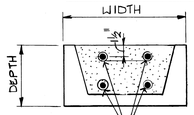

REINFORCING STEEL — TYP. SECTION OF BOND BEAM

LINTEL SCHEDULE			
TYPE	WIDTH	DEPTH	REINFORCING
L-1	11 5/8"	8"	2 #4 T&B
L-2	11 5/8"	16"	2 #8 T&B
L-3	11 5/8"	16"	2 #4 T&B
L-4	11 5/8"	8"	2 #4 T&B
L-5	11 5/8"	16"	2 #6 T&B
L-6	11 5/8"	24"	2 #4 T&B
L-7	11 5/8"	16"	2 #4 T&B
L-8	11 5/8"	8"	2 #6 T&B

NOTE: LINTELS SHALL EXTEND A MINIMUM OF 8" BEYOND OPENING ABOVE OR BELOW (WHICH EVER IS LONGER) UNLESS SHOWN CONTINUOUS ABOVE.

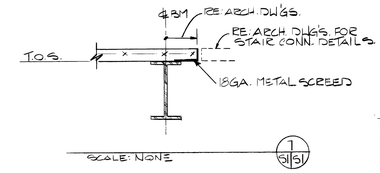

SCALE: NONE

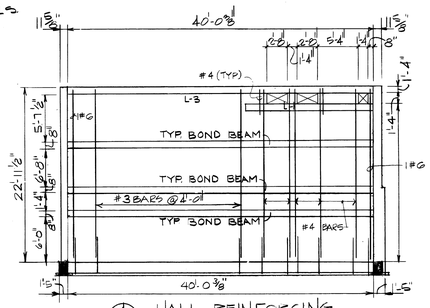

WALL REINFORCING

SEE DET. 6/S1 FOR NOTES

SIM 4/S1 OPP. HAND

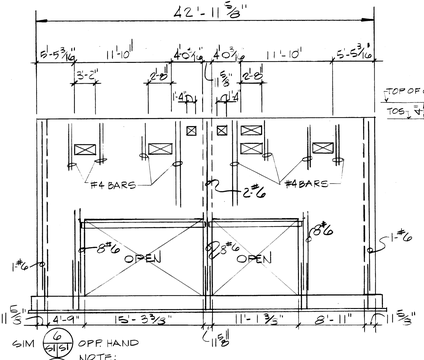

SIM 6/S1 OPP. HAND

NOTE:
1. WHERE 2 BARS ARE SHOWN, THEY SHALL BE PLACED IN THE FIRST 2 CAVITIES ADJACENT TO THE OPENING.
2. PLACE 1-#6 BAR FULL HEIGHT @ ALL WALL CORNERS.
3. BARS WHICH ARE NOT FULL HEIGHT SHALL EXTEND 24" BEYOND THE CORNERS OF OPENINGS.
4. TRANSVERSE HORIZONTAL MEMBERS ARE NOT SHOWN FOR CLARITY.
5. FTG. DWL'S TO MATCH VERT. REINF.

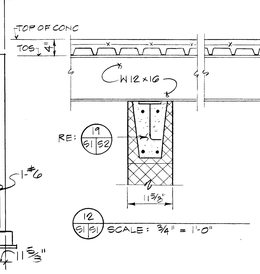

12/S1 SCALE: 3/4" = 1'-0"

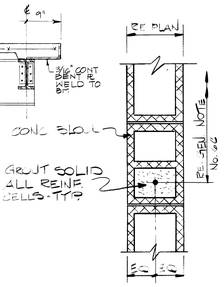

5/S1 TYPICAL REINFORCED BLOCK DETAIL
SCALE: 1" = 1'-0"

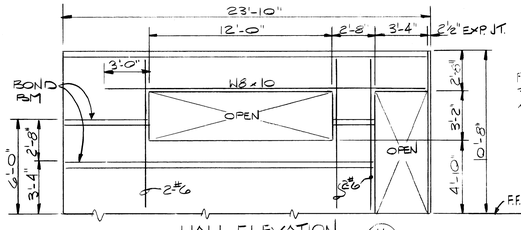

WALL ELEVATION

SCALE: 1/4" = 1'-0"

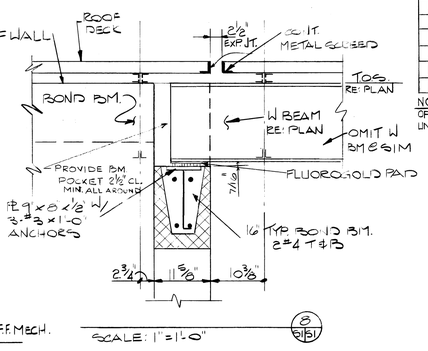

SCALE: 1" = 1'-0"

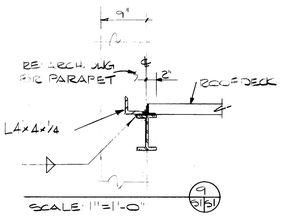

SCALE: 1" = 1'-0"

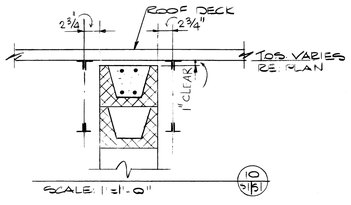

SCALE: 1" = 1'-0"

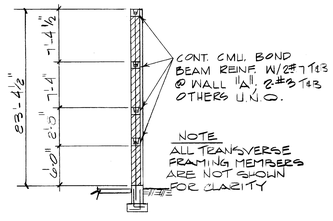

TYPICAL EXTERIOR WALL SECTION

NOTE: ALL BOND BEAMS SHALL HAVE JOINT REINFORCEMENT.

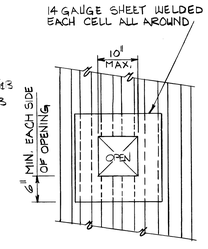

NOTE
1) PROVIDE CONTINUOUS METAL SCREEN AROUND OPEN 1'-0" AT THE UPPER LEVEL

TYPICAL METAL DECK REINFORCEMENT FOR UNFRAMED OPENINGS

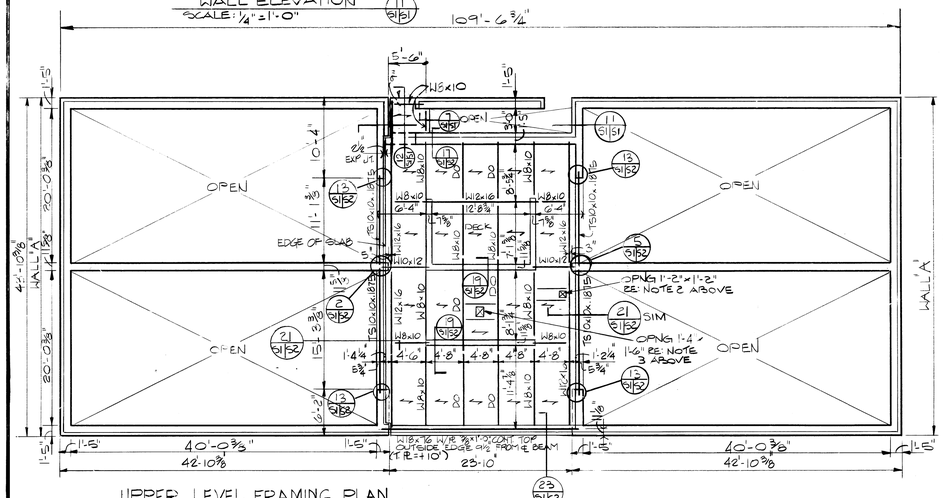

UPPER LEVEL FRAMING PLAN

1. SCALE: 1/8" = 1'
2. TOP OF CONC +10'-0" UNO
3. TOP OF STEEL +9'-8" UNO
4. ALL ELEVATIONS MEASURED FROM FINISHED LOWER LEVEL
5. GROUT CELLS 2 COURSES MIN. BELOW ALL BEAM BASE ⊥

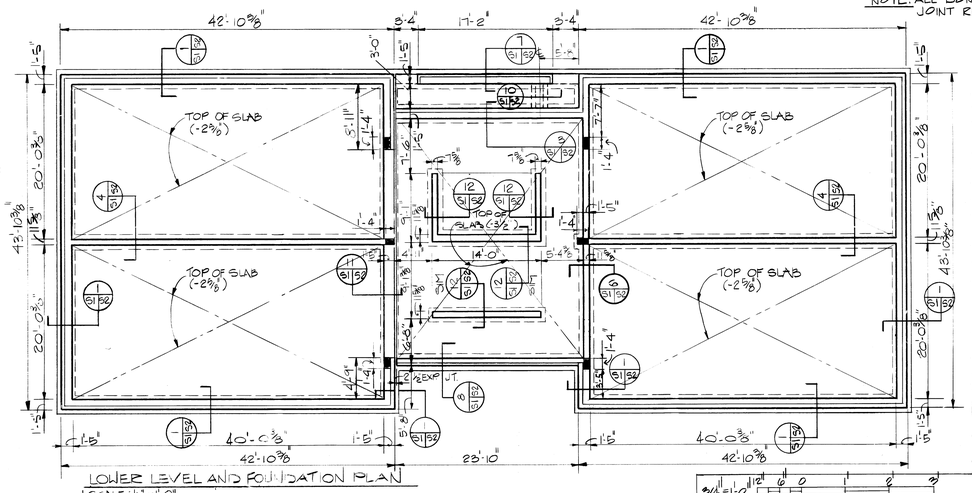

LOWER LEVEL AND FOUNDATION PLAN

1. SCALE: 1/8" = 1'-0"
2. ALL ELEVATIONS MEASURED FROM FINISHED FLOOR
3. ALL SLAB ON GRADE 4" THK. W/ W.W.F. 6x6 - W2.1 x W2.1
4. RE: A.M. P & E SHEETS FOR CONC. PADS, SLEEVES, ETC.

1/4" = 1'-0" 1/8" = 1'-0"

SYMBOL	DESCRIPTION	DATE	APPR.

REVISIONS

CAUDILL ROWLETT SCOTT
ARCHITECTS ENGINEERS
NEW YORK HOUSTON LOS ANGELES

DEPARTMENT OF THE ARMY
CORPS OF ENGINEERS
MILITARY CONSTRUCTION ENGINEER NO. DIVISION
WASHINGTON, D.C.

DRAWN BY: J. COWEN
TRACED BY: R. ANDREWS
CHECKED BY: H.P. ZWEIG
SUBMITTED BY: C.H. POULARD
CAUDILL ROWLETT SCOTT
APPROVED: APPROVED: DATE

HANDBALL FACILITIES

FOUR COURT FACILITY

STRUCTURAL PLANS AND ELEVATIONS

CHIEF, BRANCH CHIEF ENGINEERING DIVISION MILITARY DIVISION

APPROVED FOR: STANDARD DESIGN 6-1-79

SPEC. NO. 31 25 01 (TYPE 4)

DRAWING NUMBER 31-25-02 5 OF 19

S1