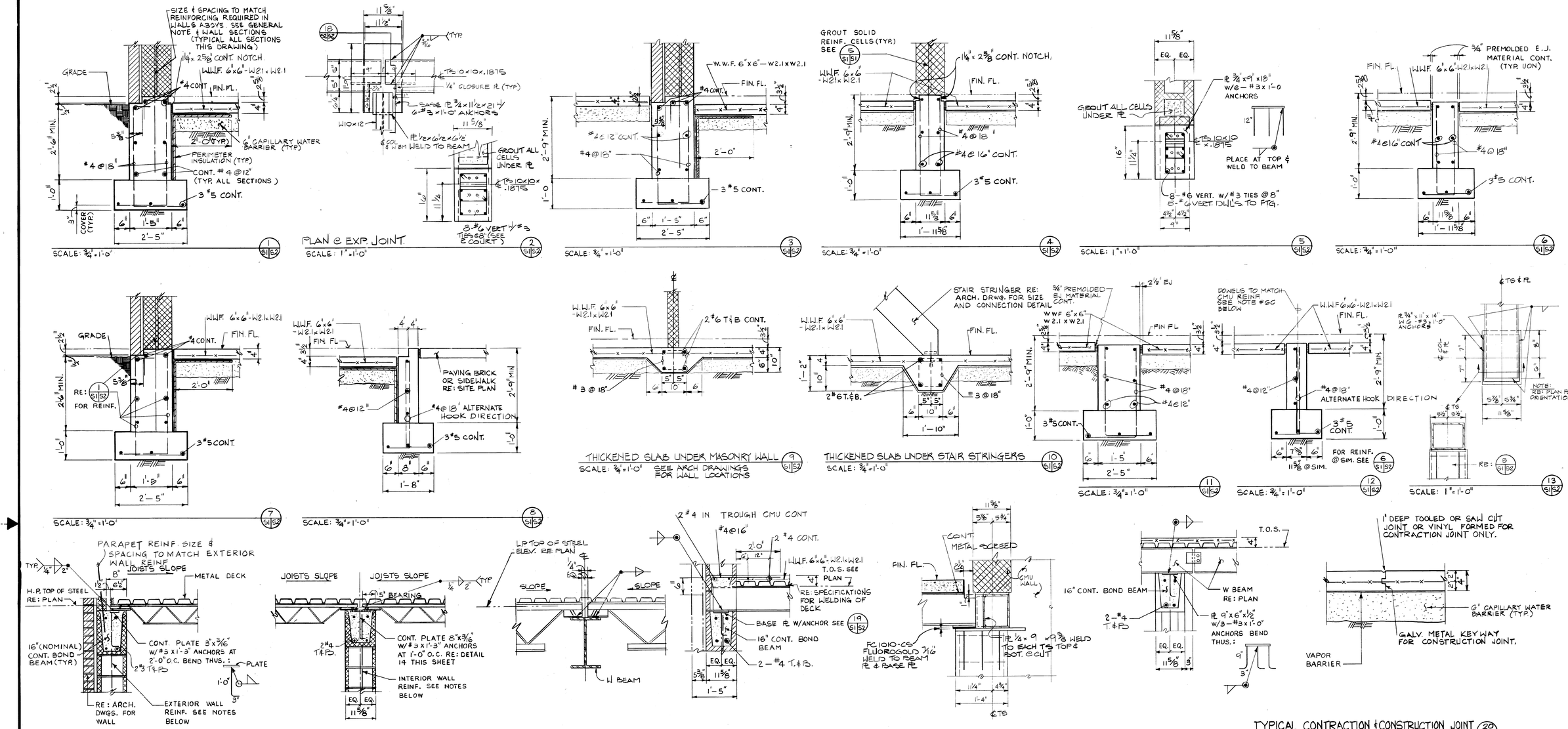

JOIST BEARING AT HIGH POINT (14/S1.52) SCALE: ¾"=1'-0"

JOIST BEARING AT LOW POINT (15/S1.52) SCALE: ¾"=1'-0"

(16/S1.52) SCALE: 1½"=1'-0"

UPPER LEVEL DECK ANCHORAGE (17/S1.52) SCALE: ¾"=1'-0"

SECTION AT EXP. JOINT (18/S1.52) SCALE: 1"=1'-0"

(19/S1.52) SCALE: ¾"=1'-0"

TYPICAL CONTRACTION & CONSTRUCTION JOINT (20/S1.52) SCALE: 1½"=1'-0"

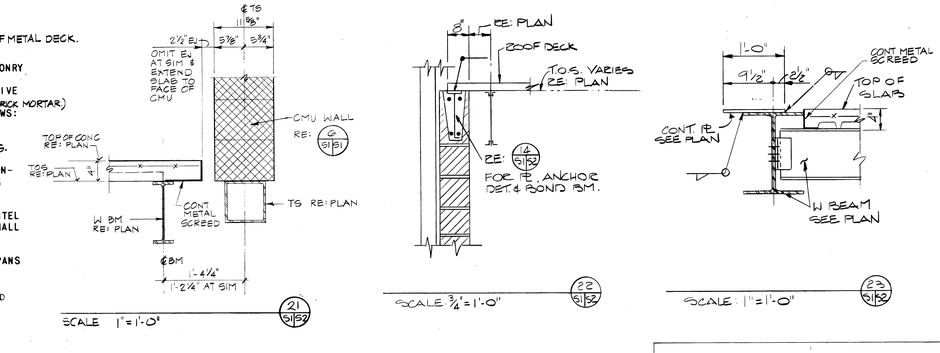

GENERAL NOTES

1. DESIGN LIVE LOADS
   A. ROOF 20 PSF
   B. MECH. SPACE 100 PSF
   C. BASIC WIND SPEED = 90 MPH
   D. SEISMIC ZONE 1
      Z = 0.25
      K = 1.33
2. MAXIMUM DESIGN LOAD AT TOP OF FOUNDATION WALL DOES NOT EXCEED 5 KIPS PER LINEAL FOOT.
3. FOUNDATION DATA
   A. ALLOWABLE SOIL BEARING 3000 PSF MINIMUM.
4. CONCRETE
   A. ALL CONCRETE SHALL BE NORMAL WEIGHT, 3000PSI FOR SLABS, LINTELS, BOND EEAMS AND CELLS TO BE FILLED.
   B. LAP ALL REINFORCING BARS 24 DIAMETERS MINIMUM.
   C. CONCRETE POURS SHALL NOT EXCEED 600 SQUARE FEET. NO SINGLE LENGTH OF POUR SHALL EXCEED 25 FEET.
   D. ALL REINFORCING STEEL TO BE 40,000 PSI OR 60,000 PSI YIELD.
5. STRUCTURAL STEEL
   A. ALL STEEL SHALL CONFORM TO ASTM A-36.
   B. DESIGN, FABRICATION AND ERECTION OF ALL STRUCTURAL STEEL SHALL CONFORM TO THE AISC MANUAL OF STEEL CONSTRUCTION, LATEST EDITION.
   C. STEEL JOISTS SHALL BE DESIGNED AND ERECTED IN ACCORDANCE WITH THE LATEST ISSUE OF THE STEEL JOIST INSTITUTE STANDARD SPECIFICATIONS.
   D. JOISTS SHALL BE MANUFACTURED FROM MATERIAL HAVING A MINIMUM YIELD OF 50,000 PSI.
   E. ALL EQUIPMENT SUSPENDED FROM OR SITTING UPON JOISTS SHALL BE SUPPORTED ON OR FROM PANEL POINTS OF JOISTS.
   F. ALL JOISTS SHALL PITCH AT 1/4" PER FOOT.
   G. BRIDGING SHALL BE ANCHORED TO MASONRY WALLS.
   H. METAL DECK SHALL HAVE A MINIMUM WORKING STRESS OF 20,000 PSI.
   I. METAL DECK SHALL BE NON-CELLULAR, 1-1/2" DEEP, MINIMUM I=.230 IN 4/FT.; MINIMUM S=.265 IN 3/FT. AND 20 GAUGE MINIMUM.
   J. SEE SPECIFICATIONS FOR WELDING AND BUTTON PUNCHING REQUIREMENTS OF METAL DECK.
6. MASONRY
   A. CONTRACTOR SHALL PROVIDE ADEQUATE TEMPORARY BRACING FOR ALL MASONRY WALLS DURING CONSTRUCTION.
   B. MORTAR SHALL BE TYPE S AND SHALL HAVE A MINIMUM 28 DAY COMPRESSIVE STRENGTH OF 1350 PSI. (SEE SPECIFICATIONS FOR SPECIAL REQUIREMENTS FOR BRICK MORTAR)
   C. UNLESS DETAILED OTHERWISE ON DRAWINGS, REINFORCE WALLS AS FOLLOWS:
      17" EXTERIOR WALLS #6@2'8 VERTICAL. SEE 5-S1-S1.
      ALL OTHER WALLS #3@4'0 VERTICAL. SEE 5-S1-S1
      SEE WALL SECTIONS AND ELEVATIONS FOR HORIZONTAL REINFORCING.
   D. WALL STIFFNERS SHALL BE PROVIDED ADJACENT TO DOORS AND OTHER OPENINGS AND ALL OTHER LOCATIONS INDICATED ON THE DRAWINGS. CONNECTIONS AT THE TOP OF THE STIFFNERS SHALL BE MADE BY EXTENDING THE VERTICAL REINFORCING AND HOOKING THE STEEL A MINIMUM OF 6 INCHES INTO BOND BEAMS.
   E. PROVIDE CORNER BARS FOR ALL FOUNDATION WALL, BOND BEAM AND LINTEL INTERSECTIONS. BARS TO BE SAME SIZE AS BEAM REINFORCING AND SHALL LAP A MINIMUM 2'0".
   F. LINTELS SHALL EXTEND A MINIMUM OF 8 INCHES ON EACH SIDE BEYOND OPENING FOR SPANS UP TO 8'0"; AND A MINIMUM OF 16 INCHES FOR SPANS GREATER THAN 8'0" AND LESS THAN 16'0".
   G. ALL CMU SHALL BE ERECTED IN RUNNING BOND CONFIGURATION.
   H. ALL WALL OPENINGS REQUIRE MINIMUM REINFORCEMENT OF 1 #4 BAR TOP AND BOTTOM AND EACH SIDE.

SYMBOL	DESCRIPTION	DATE	APPROVAL

REVISIONS

CAUDILL ROWLETT SCOTT
ARCHITECTS ENGINEERS
NEW YORK HOUSTON LOS ANGELES

DEPARTMENT OF THE ARMY
OFFICE OF THE CHIEF OF ENGINEERS
MILITARY CONSTRUCTION - ENGINEERING DIVISION
WASHINGTON, D.C.

DRAWN BY: J. COWEN
TRACED BY: R. ANDREWS
CHECKED BY: H.F. ZWEIG
SUBMITTED BY: C.H. COLLARD, CAUDILL ROWLETT SCOTT

HANDBALL FACILITIES

FOUR COURT FACILITY

STRUCTURAL DETAILS

APPROVED: APPROVED: DATE:
CHIEF BRANCH CHIEF ENGINEERING DIVISION MIL. CONSTR. O.C.E.
APPROVED FOR: STANDARD DESIGN
DATE 6-1-79
SPEC. NO. 31-25-01-76 CE
DRAWING NUMBER 31-25-02
SHEET 6 OF 15
S2

1½" = 1'-0" 12" 9" 6" 3" 0" 1'
¾" = 1'-0" 12" 6" 0" 1" 2" 3"