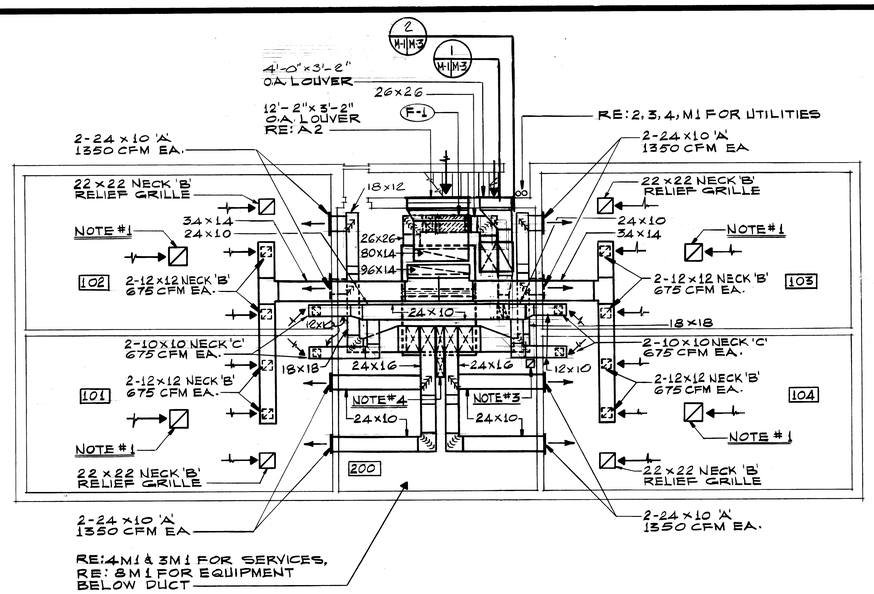

NOTES:

1-30x30 OPENING IN ROOF UP TO RELIEF AIR HOOD. RE: 5M1. (RELIEF AIR CIRCUIT ECONOMIZER CYCLE OPERATION)

2-RE: 1,4,6 S1 FOR OPENINGS IN CONCRETE WALLS.

3-12x8 UP FROM LOWER LEVEL RE: 2M1
12x8 UP TO F-2 ON ROOF

4-14x12, SPLIT IN VERTICAL TO 14x6, 14x8 DOWN THRU FLOOR. RE: 2M1 FOR CONTINUATION.

1 UPPER LEVEL PLAN
SCALE: 1/8" 1'-0"

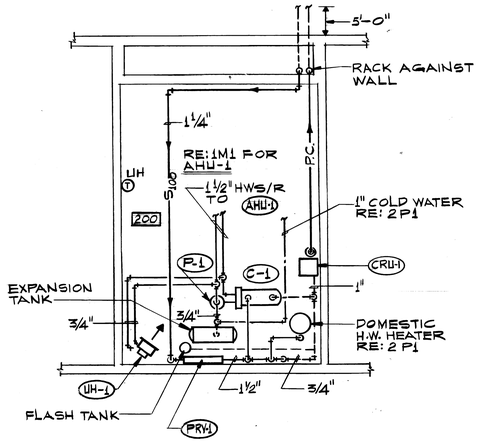

4 UPPER LEVEL PLAN WITH DISTRICT SERVICES
SCALE: 1/8"=1'-0"

SYMBOLS AND ABBREVIATIONS	
	GATE VALVE
	BUTTERFLY VALVE
	GLOBE VALVE
	PLUG (BALANCING) VALVE
	CHECK VALVE
	PRESSURE RELIEF VALVE
	PRESSURE REDUCING VALVE
	TWO-WAY CONTROL VALVE
	THREE-WAY CONTROL VALVE
	AUTOMATIC AIR VENT
	STRAINER
	THERMOMETER WELL
	THERMOMETER
	UNION
	GAUGE COCK
	PRESSURE GAUGE
	FLOAT & THERMOSTATIC TRAP
B	BUCKET TRAP
	BLIND FLANGE
	EXPANSION JOINT
V.D.	VOLUME DAMPER
F.D.	FIRE DAMPER
T	THERMOSTAT LOCATED 5'0" ABOVE FLOOR UNLESS OTHERWISE NOTED.
	NOTE: NOT ALL SYMBOLS INDICATED ON THIS LEGEND NECESSARILY APPEAR ON THE DRAWINGS.

LEGEND	
— CWS —	CHILLED WATER SUPPLY
— CWR —	CHILLED WATER RETURN
— HWS —	HOT WATER SUPPLY (HEATING)
— HWR —	HOT WATER RETURN (HEATING)
— S —	STEAM (5 PSI OR LESS)
— SPS —	STEAM (PRESSURE AS NOTED)
— GC —	STEAM CONDENSATE (GRAVITY)
— V —	VENT LINE (SAFETY RELIEF, STEAM, ETC)
— RL —	REFRIGERANT LIQUID
— RS —	REFRIGERANT SUCTION
— HG —	REFRIGERANT HOT GAS
— FOS —	FUEL OIL SUPPLY
— FOR —	FUEL OIL RETURN
— FUV —	FUEL OIL VENT
— FOG —	FUEL OIL GAUGE
— BF —	BOILER FEED WATER
— X —	PIPE ANCHOR
200 "A"	SUPPLY CEILING DIFFUSER NUMBER=CFM LETTER=TYPE
150 "G"	EXHAUST OR RETURN CEIL. REG. NUMBER=CFM LETTER=TYPE
S.A.	SUPPLY AIR
R.A.	RETURN AIR
EXH.	EXHAUST AIR
PC	STEAM CONDENSATE (PUMPED)
AP	ACCESS PANEL

EQUIPMENT DESIGNATIONS	
AHU	AIR HANDLING UNIT
UH	UNIT HEATER
ACCU	AIR COOLED CONDENSING UNIT
F	FAN
RSA	RETURN SOUND ATTENUATOR
B	BOILER
P	WATER PUMP
CRU	CONDENSATE RETURN UNIT
C	CONVERTOR
PRS	PRESSURE REDUCING STATION
PRV	PRESSURE REDUCING VALVE
	MOTORIZED VOLUME DAMPER

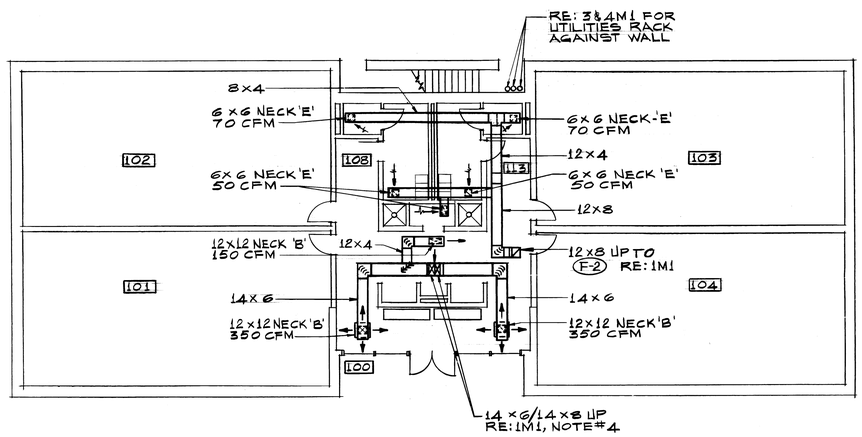

2 LOWER LEVEL PLAN
SCALE: 1/8"=1'-0"

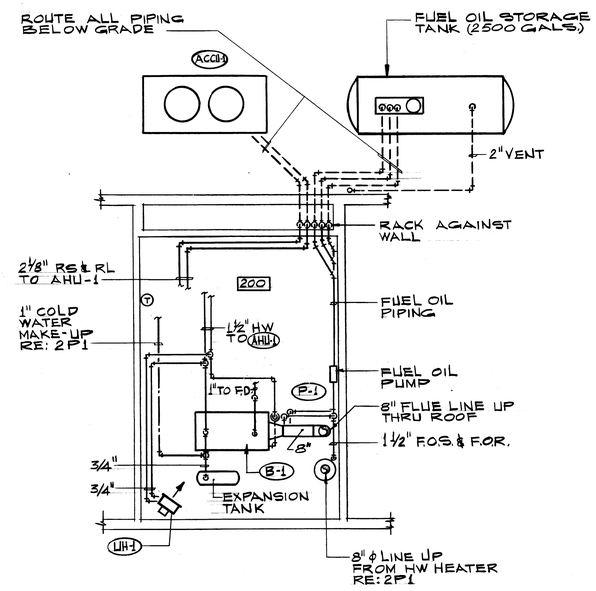

3 UPPER LEVEL PLAN WITH LOCAL SERVICES
SCALE: 1/8" 1'-0"

¼"=1'-0" 5" 0 5'

⅛"=1'-0" 5" 0 5' 10' 15' 20'

SYMBOL	DESCRIPTION	DATE	APPROVAL

REVISIONS

CAUDILL ROWLETT SCOTT
ARCHITECTS ENGINEERS
NEW YORK HOUSTON LOS ANGELES

DEPARTMENT OF THE ARMY
OFFICE OF THE CHIEF OF ENGINEERS
MILITARY CONSTRUCTION - ENGINEERING DIVISION
WASHINGTON, D.C.

DRAWN BY: N. W. PIERRE
TRACED BY: N. W. PIERRE
CHECKED BY: J.F.
SUBMITTED BY: C.H. POLLARD, CAUDILL ROWLETT SCOTT
APPROVED: CHIEF BRANCH
APPROVED: CHIEF ENGINEERING DIVISION MIL. CONSTR. O.C.E.
DATE:

HANDBALL FACILITIES

FOUR COURT FACILITY
MECHANICAL ROOM PLAN

APPROVED FOR: STANDARD DESIGN
DATE 6-1-79

SPEC. NO. 31-25-01-76 CE
DRAWING NUMBER 31-25-02
SHEET 7 OF 15

M-1