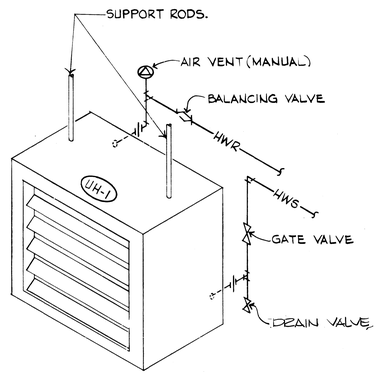

2 HOT WATER UNIT HEATER DETAIL
NO SCALE

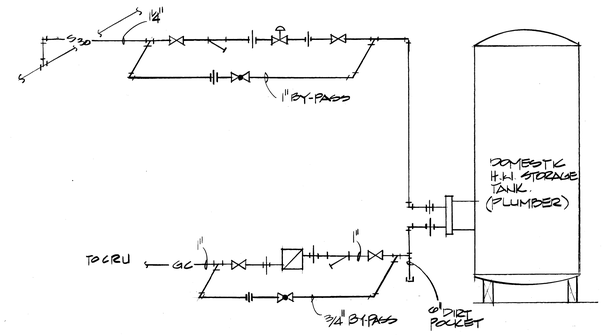

7 DOMESTIC HOT WATER HTR. CONN. DET.
NO SCALE

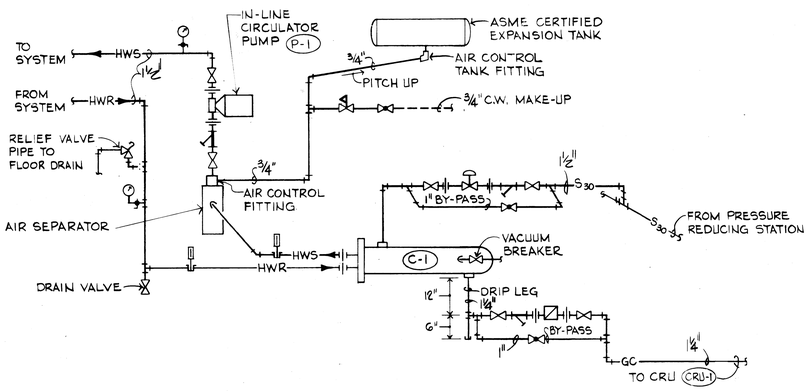

3 CONVERTOR CONNECTION DETAIL
NO SCALE

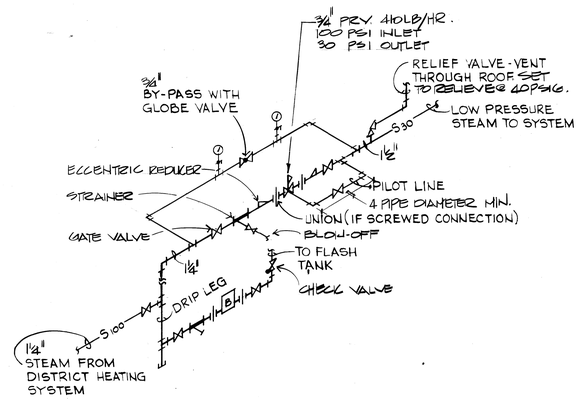

4 STEAM PRESSURE REDUCING STATION
NO SCALE

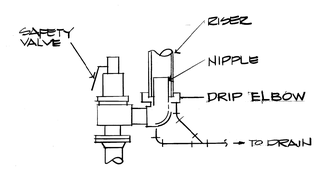

8 STEAM RELIEF DRIP ELBOW
NO SCALE

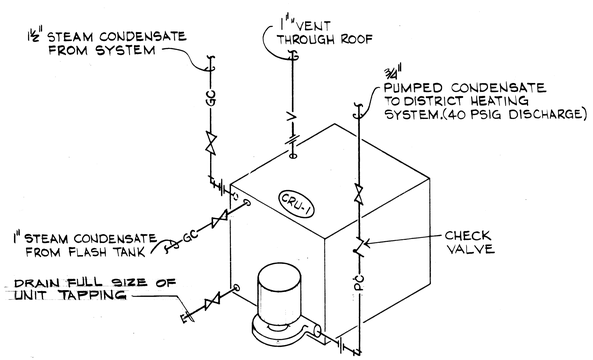

5 CONDENSATE RETURN UNIT DETAIL
NO SCALE

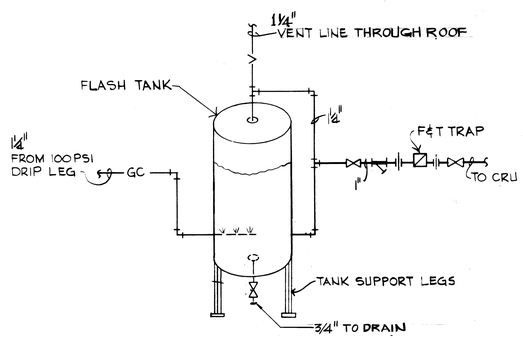

6 FLASH TANK DETAIL
NO SCALE

SYMBOL	DESCRIPTION	DATE	APPROVAL

REVISIONS

CAUDILL ROWLETT SCOTT
ARCHITECTS ENGINEERS
NEW YORK HOUSTON LOS ANGELES

DEPARTMENT OF THE ARMY
OFFICE OF THE CHIEF OF ENGINEERS
MILITARY CONSTRUCTION - ENGINEERING DIVISION
WASHINGTON, D.C.

DRAWN BY: H. HOLLIE
TRACED BY: M.F
CHECKED BY: J.F
SUBMITTED BY: C.H. POLLARD, CAUDILL ROWLETT SCOTT
APPROVED:
CHIEF BRANCH

HANDBALL FACILITIES

FOUR COURT FACILITY

DETAILS

APPROVED: DATE:
CHIEF ENGINEERING DIVISION MIL. CONSTR. O.C.E.

APPROVED FOR: STANDARD DESIGN
DATE 6-1-79

SPEC. NO. 31-25-01-76 CE
DRAWING NUMBER 31-25-02
SHEET 8 OF 15

M-2

¼" = 1'-0" 5' 0 5'