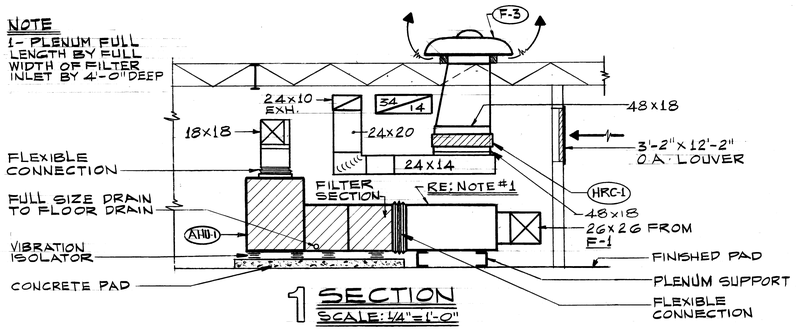

1 SECTION
SCALE: 1/4"=1'-0"

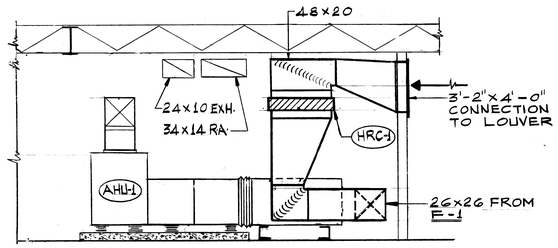

2 SECTION
SCALE: 1/4"=1'-0"

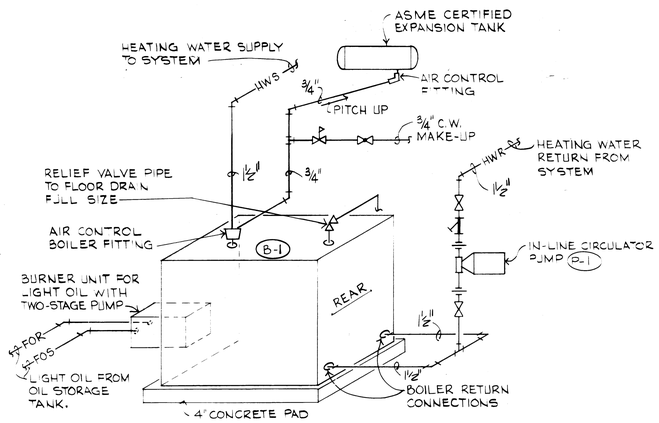

3 BOILER CONNECTION DETAIL
NO SCALE

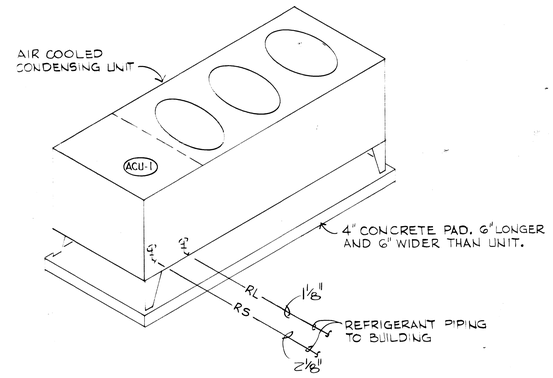

2 AIR COOLED CONDENSING UNIT DETAIL
NO SCALE

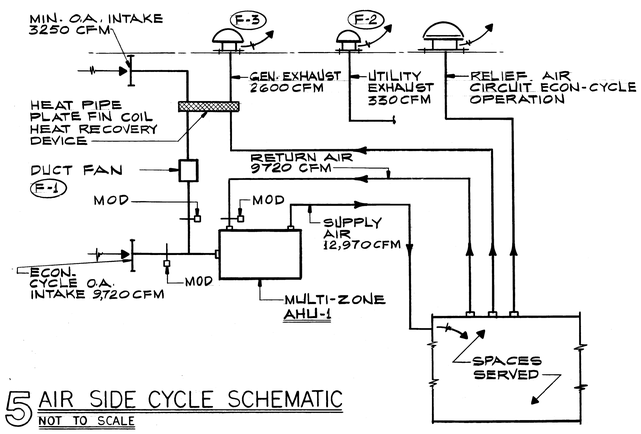

5 AIR SIDE CYCLE SCHEMATIC
NOT TO SCALE

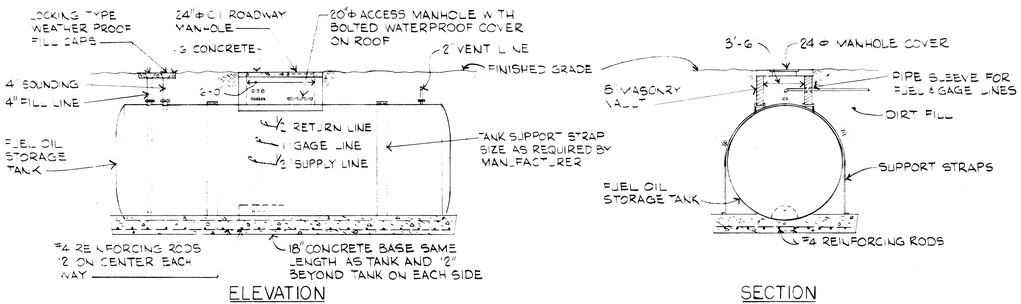

4 UNDERGROUND OIL STORAGE TANK DETAIL
NO SCALE

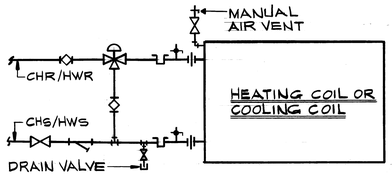

6 CHILLED OR HOT WATER COIL PIPING
NOT TO SCALE

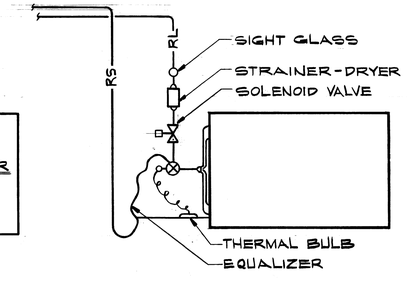

7 DIRECT EXP COOLING COIL PIPING
NOT TO SCALE

1/4"=1'-0" 5' 0 5'

SYMBOL	DESCRIPTION	DATE	APPROVAL

REVISIONS

CAUDILL ROWLETT SCOTT
ARCHITECTS ENGINEERS
NEW YORK HOUSTON LOS ANGELES

DEPARTMENT OF THE ARMY
OFFICE OF THE CHIEF OF ENGINEERS
MILITARY CONSTRUCTION - ENGINEERING DIVISION
WASHINGTON, D.C.

DRAWN BY: H. HOLLIE & N.W.P.
TRACED BY: H.H.
CHECKED BY: J.F.
SUBMITTED BY: C.H. FOULARD (CAUDILL ROWLETT SCOTT)
APPROVED:
CHIEF BRANCH

HANDBALL FACILITIES
FOUR COURT FACILITY
DETAILS

APPROVED: DATE:
CHIEF ENGINEERING DIVITION MIL. CONSTR. O.C.E.

APPROVED FOR: STANDARD DESIGN
DATE 6-1-79

SPEC NO. 31-25-01-76 CE
DRAWING NUMBER 31-25-02
SHEET 9 OF 15
M 3