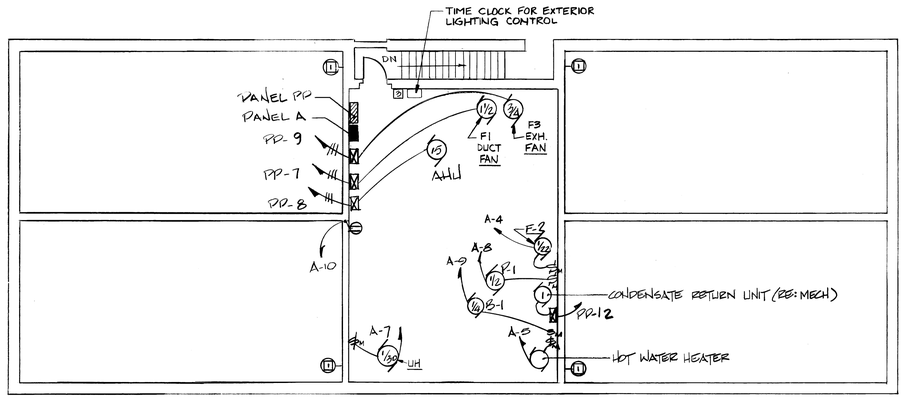

UPPER LEVEL PLAN- POWER & SIGNAL

SCALE: 1/8" = 1'-0"

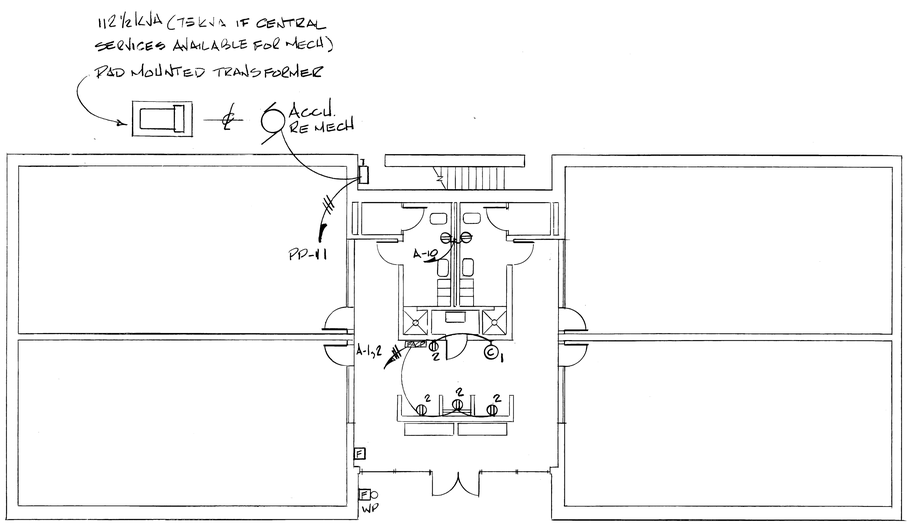

LOWER LEVEL PLAN- POWER & SIGNAL

SCALE: 1/8" = 1'-0"

NOTES: 1. REQUIRED FOR CENTRAL SERVICES OPTION.

2. REQUIRED FOR LOCAL/HEAT/LOCAL COOLING OPTION.

PANEL "A" 120/208V 3Φ4 WIRE SURF MOUNTED 40 AMPERE MAIN BREAKER
LOCATION RM. 104 — 100 AMPERE BUS

CKT. No.	A	B	C	DESCRIPTION	OLTS	CKT. BKR. AMPS	PHASE A	PHASE B	PHASE C	CKT. BKR. AMPS	DESCRIPTION	A	B	C	CKT. No.
1	600			REC. FACP	1	20			20	1	REC.	720			2
3		200		EXT. LTG.	2						EX. FAN-F-2		35		4
5			667	HEATER	1					4	LTG EMERG.			150	6
7	50			UNIT HTRS	1					1	PUMP - P1	1127			8
9		667		BLOWER	1					3	RECP		540		10
11			1000	SPARE	1						SPARE			1000	12
13															14
15															16
17															18
19															20
21															22
23															24
25															26
27															28
29															30
31															32
33															34
35															36
37															38
39															40
41															42
	600	867	1667					SUB-TOTALS				1847	675	1150	
	2447	902	2817	TOTAL VA = LOC. ADDER TOTAL VA LINE AMPS											

*CKT #10 - GFCI BREAKER

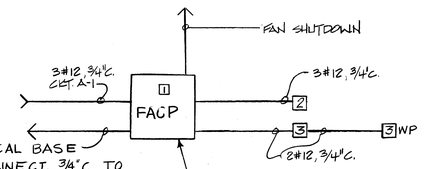

FIRE ALARM SYSTEM

N.T.S.

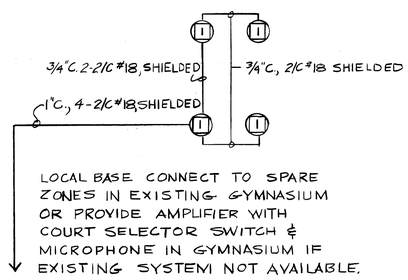

SIGNAL SYSTEM

N.T.S.

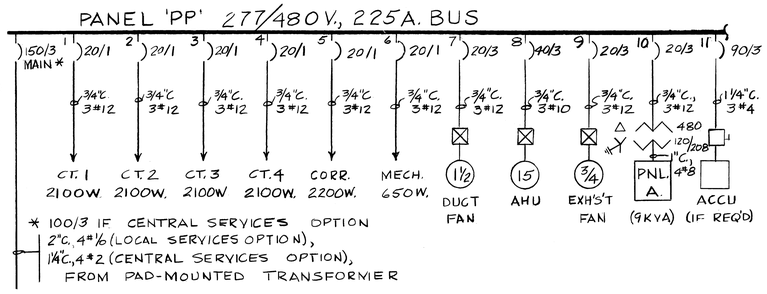

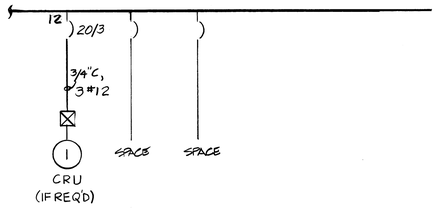

ONE LINE DIAGRAM

N.T.S.

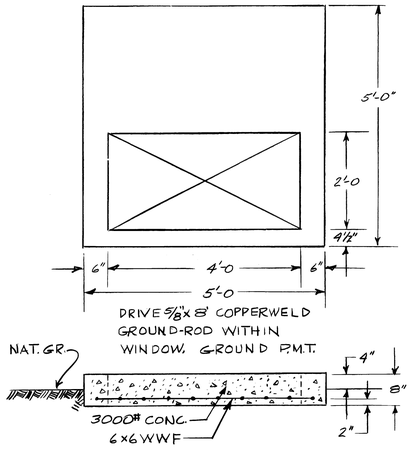

PAD DETAIL

N.T.S.

SYMBOL	DESCRIPTION	DATE	APPROVAL

REVISIONS

CAUDILL ROWLETT SCOTT
ARCHITECTS ENGINEERS
NEW YORK HOUSTON LOS ANGELES

DEPARTMENT OF THE ARMY
OFFICE OF THE CHIEF OF ENGINEERS
MILITARY CONSTRUCTION - ENGINEERING DIVISION
WASHINGTON, D.C.

DRAWN BY: PAT MANN
TRACED BY: P.M.
CHECKED BY: VINCE CALICCHIA
SUBMITTED BY: C.H. POLLARD, CAUDILL ROWLETT SCOTT
APPROVED: CHIEF BRANCH
APPROVED: CHIEF ENGINEERING DIVISION MIL. CONSTR. O.C.E.
DATE:

HANDBALL FACILITIES

FOUR COURT FACILITY ELECTRICAL

1/8" = 1'-0" 5' 0 5' 10' 15' 20'

APPROVED FOR: STANDARD DESIGN
DATE 6-1-79

SPEC. NO. 31-25-01-76 CE
DRAWING NUMBER 31-25-02
SHEET 11 OF 19

E1