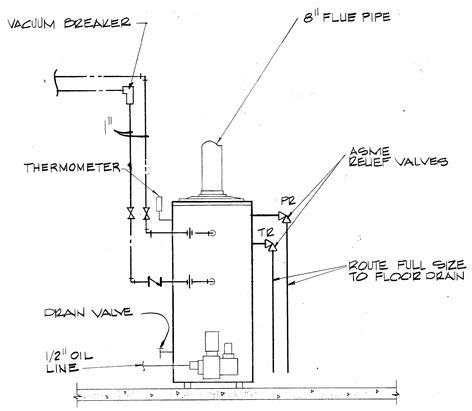

1 DETAIL - STORAGE HEATER - OIL
NOT TO SCALE
RE: 1P1

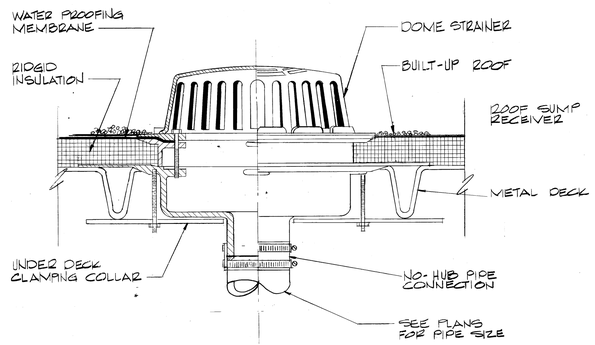

2 DETAIL - ROOF DRAIN
NOT TO SCALE
RE: 2P1

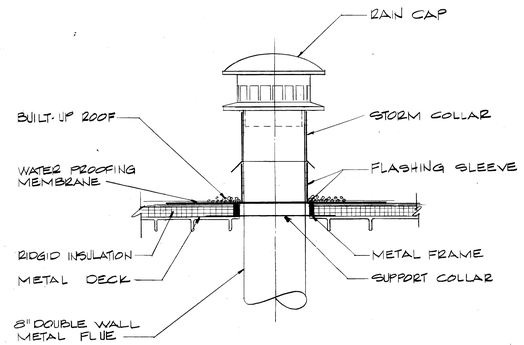

3 DETAIL - METAL FLUE ROOF PENETRATION
NOT TO SCALE
RE: 2P1

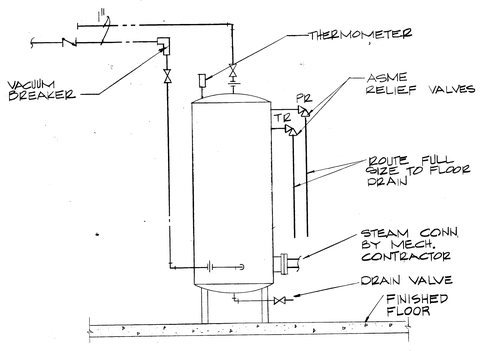

4 DETAIL - STORAGE HEATER - STEAM
NOT TO SCALE
RE: 1P1

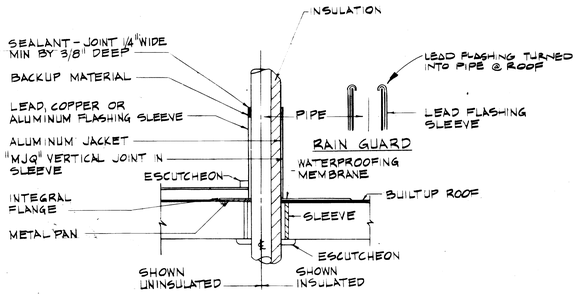

5 DETAIL - PIPE SLEEVE IN FLOOR OR ROOF WATERPROOFING MEMBRANE
NOT TO SCALE

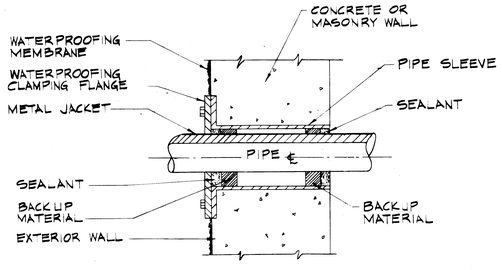

6 DETAIL - PIPE SLEEVE THRU EXTERIOR WALL OR FOUNDATION (BELOW GRADE)
NOT TO SCALE

SYMBOL	DESCRIPTION	DATE	APPROVAL

REVISIONS

CAUDILL ROWLETT SCOTT
ARCHITECTS ENGINEERS
NEW YORK HOUSTON LOS ANGELES

DEPARTMENT OF THE ARMY
OFFICE OF THE CHIEF OF ENGINEERS
MILITARY CONSTRUCTION - ENGINEERING DIVISION
WASHINGTON, D.C.

DRAWN BY: JEFF HUGHES
TRACED BY: J.H.
CHECKED BY: JF
SUBMITTED BY: C.H. POLLARD CAUDILL ROWLETT SCOTT
APPROVED:
CHIEF BRANCH

HANDBALL FACILITIES

FOUR COURT FACILITY
PLUMBING

APPROVED: DATE:
CHIEF ENGINEERING DIVISION MIL. CONSTR. O.C.E.

APPROVED FOR: STANDARD DESIGN
DATE 6-1-79

SPEC. NO. 31-25-01-78 CE
DRAWING NUMBER 31-25-02
SHEET 14 OF 18
P2

TRIM LINES