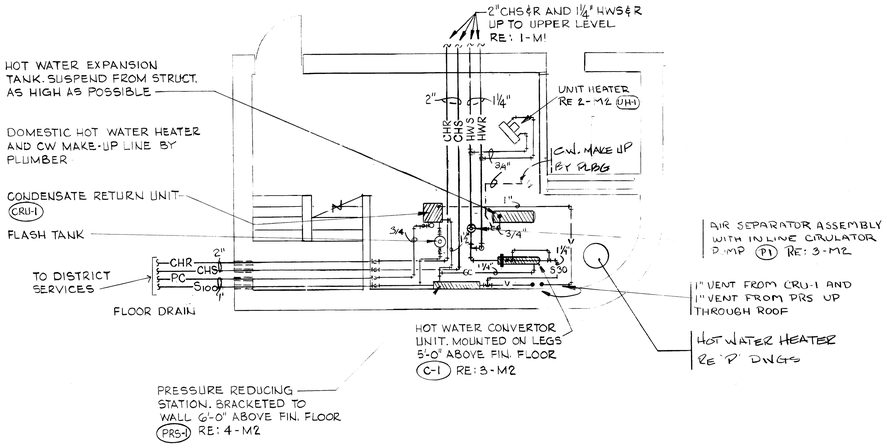

1 CONVERTOR ROOM LAYOUT WITH DISTRICT SERVICES
SCALE: ¼" = 1'-0"

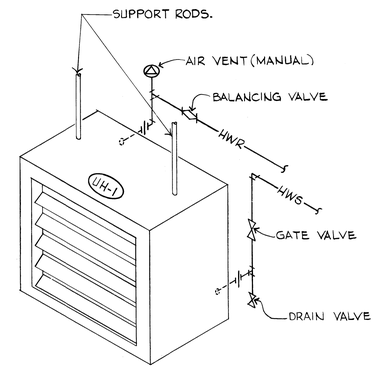

2 HOT WATER UNIT HEATER DETAIL
NO SCALE

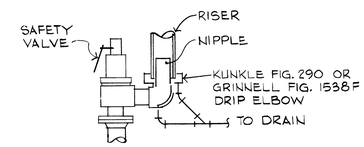

7 STEAM RELIEF DRIP ELBOW
NO SCALE

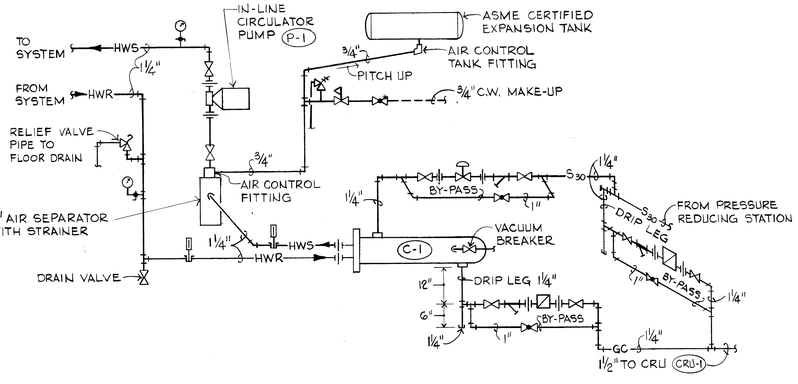

3 CONVERTOR CONNECTION DETAIL
NO SCALE

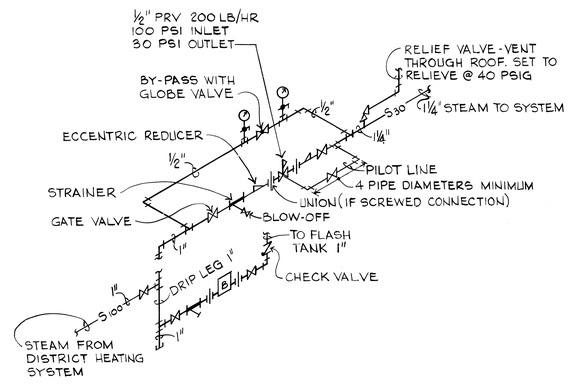

4 STEAM PRESSURE REDUCING STATION
NO SCALE

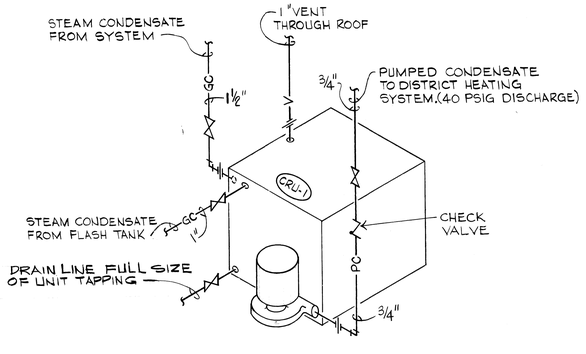

5 CONDENSATE RETURN UNIT DETAIL
NO SCALE

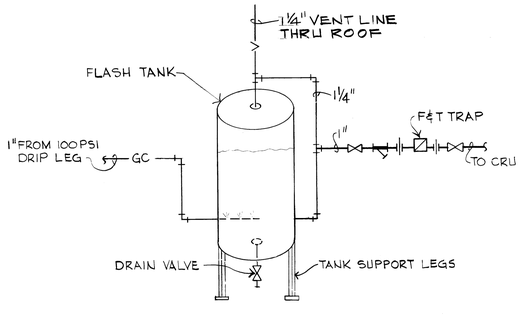

6 FLASH TANK DETAIL
NO SCALE

1/4" = 1'-0"

REVISIONS

CAUDILL ROWLETT SCOTT
ARCHITECTS ENGINEERS
NEW YORK HOUSTON LOS ANGELES

DEPARTMENT OF THE ARMY
OFFICE OF THE CHIEF OF ENGINEERS
MILITARY CONSTRUCTION ENGINEER NORTH DIVISION
WASHINGTON, D.C.

DRAWN BY: H. HOLLIE
TRACED BY: M.F.
CHECKED BY:
SUBMITTED BY: C.H. POLLARD
CAUDILL ROWLETT SCOTT
APPROVED

HANDBALL FACILITIES
TWO COURT FACILITY
CONVERTER ROOM PLAN

CHIEF BRANCH CHIEF ENGINEERING DIVISION MILCON CONSTR. OFFICE

APPROVED FOR
STANDARD DESIGN
DATE 6-1-79

SPEC NO 31-25-01-76 CE
DRAWING NUMBER 31-25-03
SHEET 8 OF 14

M 2