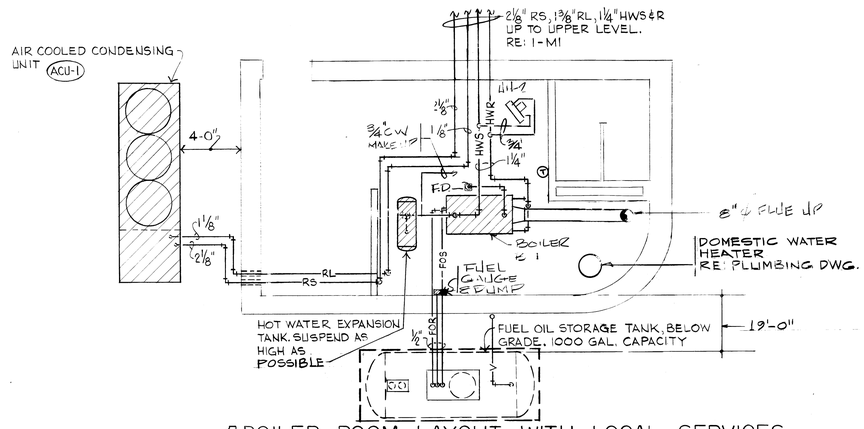

1 BOILER ROOM LAYOUT WITH LOCAL SERVICES
SCALE: ¼" = 1'-0"

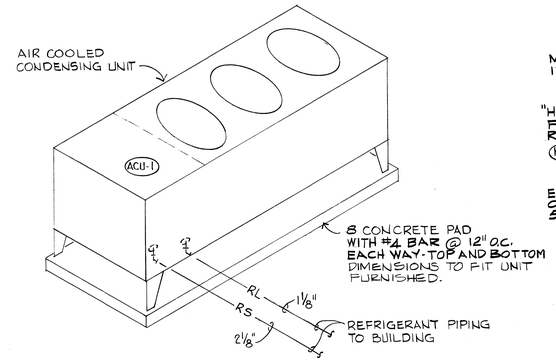

2 AIR COOLED CONDENSING UNIT DETAIL
NO SCALE

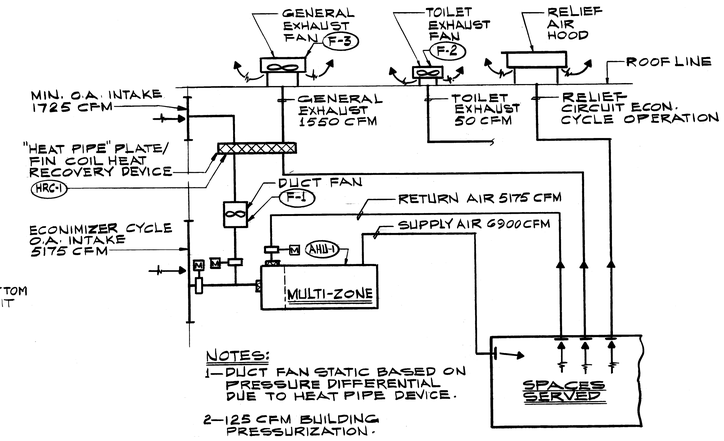

NOTES:
1—DUCT FAN STATIC BASED ON PRESSURE DIFFERENTIAL DUE TO HEAT PIPE DEVICE.
2—125 CFM BUILDING PRESSURIZATION.

3 AIR SIDE CYCLE SCHEMATIC
NO SCALE

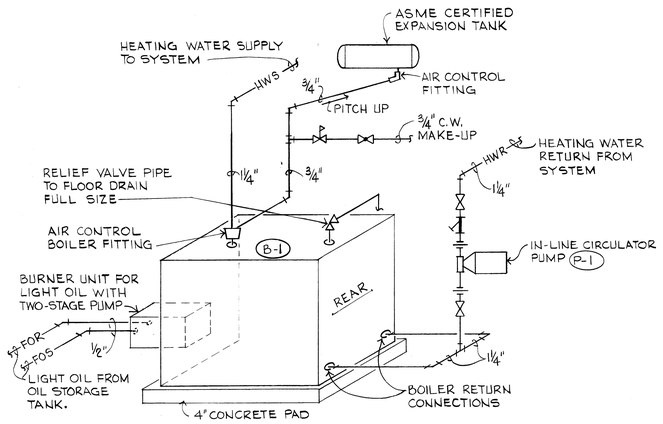

4 BOILER CONNECTION DETAIL
NO SCALE

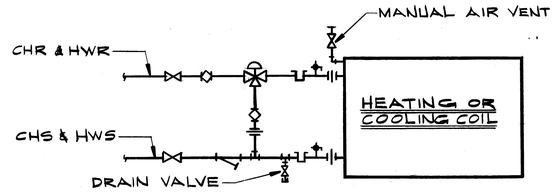

5 CHILLED OR HOT WATER COIL PIPING
NO SCALE

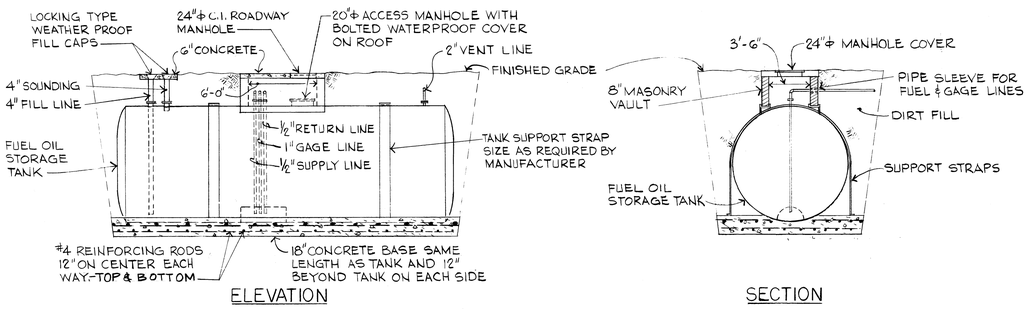

6 UNDERGROUND OIL STORAGE TANK DETAIL
NO SCALE

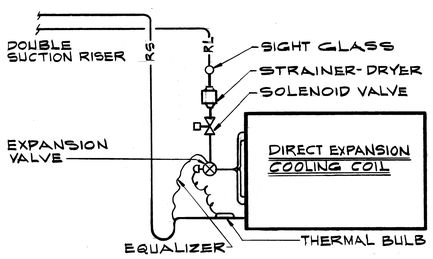

7 DIRECT EXP. COOLING COIL PIPING
NO SCALE

1/4"=1'-0" 5' 0' 5'

1/8"=1'-0" 5' 0' 5' 10' 15' 20'

SYMBOL	DESCRIPTION	DATE	APPROVAL

REVISIONS

CAUDILL ROWLETT SCOTT
ARCHITECTS ENGINEERS
NEW YORK HOUSTON LOS ANGELES

DEPARTMENT OF THE ARMY
OFFICE OF THE CHIEF OF ENGINEERS
MILITARY CONSTRUCTION-ENGINEERING DIVISION
WASHINGTON, D.C.

DRAWN BY: H. HOLLIE
TRACED BY: H.H.
CHECKED BY:
SUBMITTED BY: C.H. POLLARD
CAUDILL ROWLETT SCOTT
APPROVED: APPROVED DATE
CHIEF BRANCH CHIEF ENGINEERING DIVISION M. CONSTR. DIV.

HANDBALL FACILITIES
TWO COURT FACILITY
ALTERNATE BOILER ROOM PLAN

APPROVED FOR: STANDARD DESIGN
DATE 6-1-79
SPEC NO. 31-25-01-76 CE
DRAWING NUMBER 31-25-05
SHEET 9 OF 14
M 3