## 1 DRINKING WATER DISPENSER SCHEDULE

| FIXTURE NUMBER | DESIGN CONDITIONS | | | | | COMPRESSOR | ELECTRICAL REQUIREMENTS | | | REMARKS |
|---|---|---|---|---|---|---|---|---|---|---|
| | AMBIENT AIR TEMP. | INLET WATER TEMP. | SUPPLY WATER TEMP. | STORAGE CAPACITY | GALLONS PER HOUR RECOVERY | HORSEPOWER | VOLTS | PHASE | CYCLE | |
| F-12A | 70°F | 80°F | 50°F | — | 8.4 | 1/5 | 120 | 1 | 60 | |
| | | | | | | | | | | |
| | | | | | | | | | | |
| | | | | | | | | | | |
| | | | | | | | | | | |
| | | | | | | | | | | |

## 2 SCHEDULE OF ELECTRIC WATER HEATERS

| FIXTURE NUMBER | STORAGE CAPACITY (GALLONS | DIAMETER/ HEIGHT (IN) | RECOVERY AT 100°F TEMP RISE (GAL/HR) | NUMBER OF HEATING ELEMENTS & TOTAL KW | WATTS PER ELEMENT | VOLTS/ PHASE/ CYCLE | REMARKS |
|---|---|---|---|---|---|---|---|
| WH | 6 | 4"x15" | 6 | 1 / 1.5 | 60/SQ. IN. | 120/1/60 | |
| | | | | | | | |
| | | | | | | | |
| | | | | | | | |

## 3 SHOCK ARRESTOR SCHEDULE

| SHOCK ARRESTOR SIZE | FIXTURE UNITS |
|---|---|
| A | 1-11 |
| B | 12-32 |
| C | 33-60 |
| D | 61-113 |
| E | 114-154 |
| F | 155-330 |

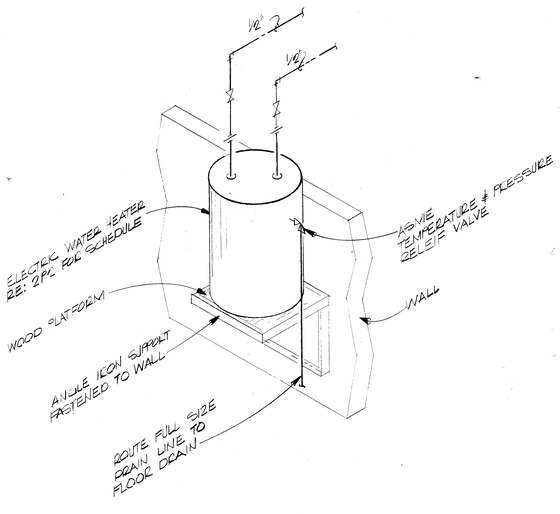


4 DETAIL- ELECTRIC WATER HEATER
NOT TO SCALE
RE: 2P1

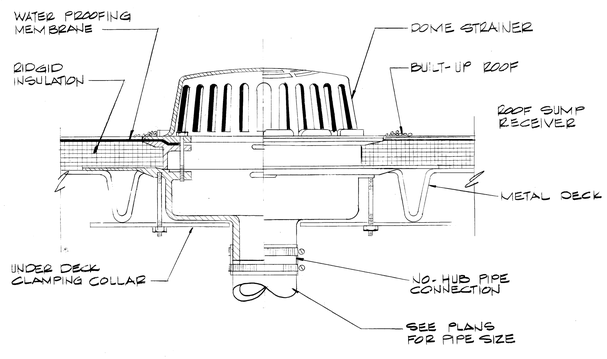


5 DETAIL- ROOF DRAIN
NOT TO SCALE
RE: 1P1

| SYMBOL | DESCRIPTION | DATE | APPROVAL |
|---|---|---|---|
| | | | |

REVISIONS

CAUDILL ROWLETT SCOTT
ARCHITECTS ENGINEERS
NEW YORK HOUSTON LOS ANGELES

DEPARTMENT OF THE ARMY
OFFICE OF THE CHIEF OF ENGINEERS
MILITARY CONSTRUCTION - ENGINEERING DIVISION
WASHINGTON, D.C.

DRAWN BY: GM
TRACED BY: GM
CHECKED BY: GM
SUBMITTED BY: CAUDILL ROWLETT SCOTT
APPROVED: CHIEF BRANCH

**HANDBALL FACILITIES**

TWO COURT FACILITY
PLUMBING

APPROVED: CHIEF ENGINEERING DIVISION MIL. CONSTR. O.C.E.
DATE:

APPROVED FOR: STANDARD DESIGN
DATE 6-1-79

SPEC. NO. 31-25-01-76 CE
DRAWING NUMBER 31-25-03
SHEET 14 OF 14
P.2