8-8-57
11-29-57

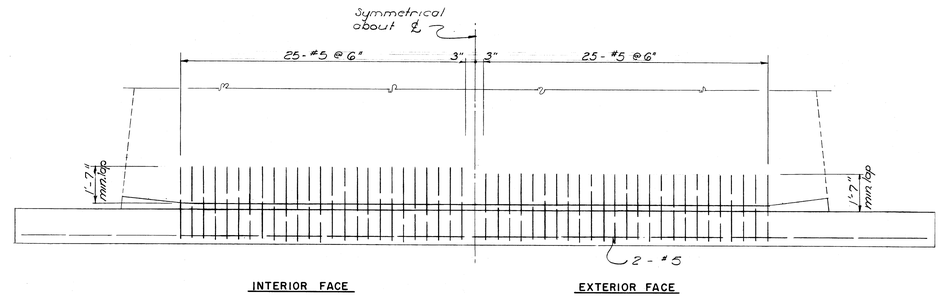

SHALLOW TYPE FOOTING

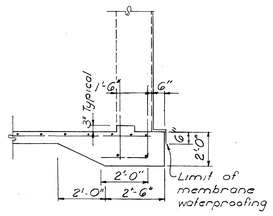

SECTION

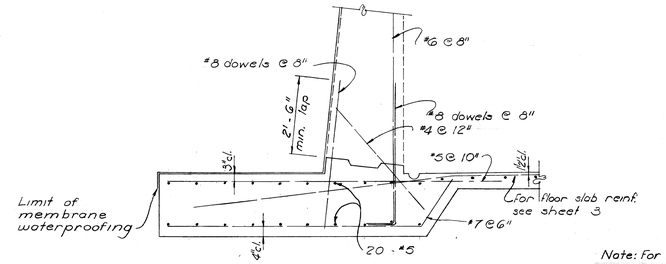

SHALLOW TYPE FOOTING
EARTH OR ROCK

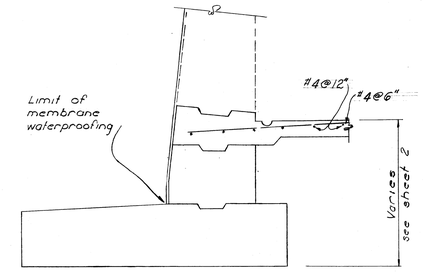

Note: For reinforcing see medium type footing

INTERMEDIATE TYPE FOOTING

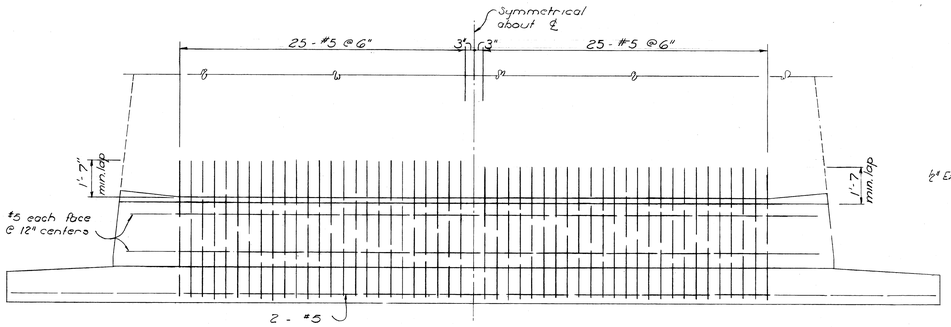

MEDIUM TYPE FOOTINGS

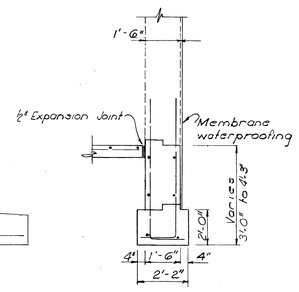

MEDIUM

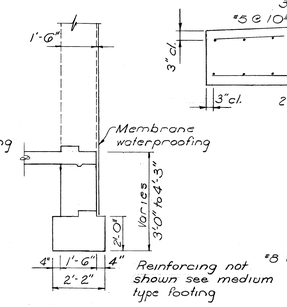

INTERMEDIATE

SECTIONS

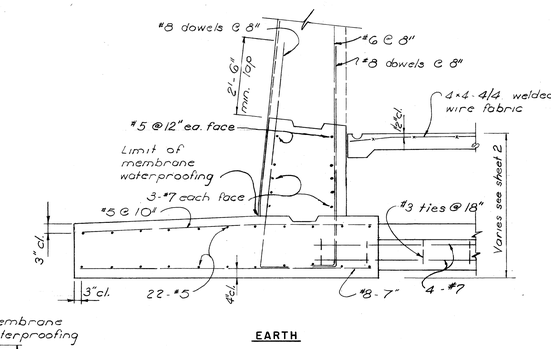

EARTH

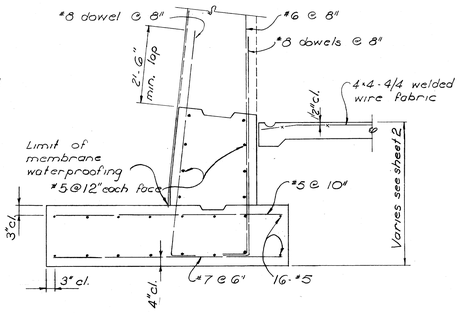

ROCK

MEDIUM TYPE FOOTING

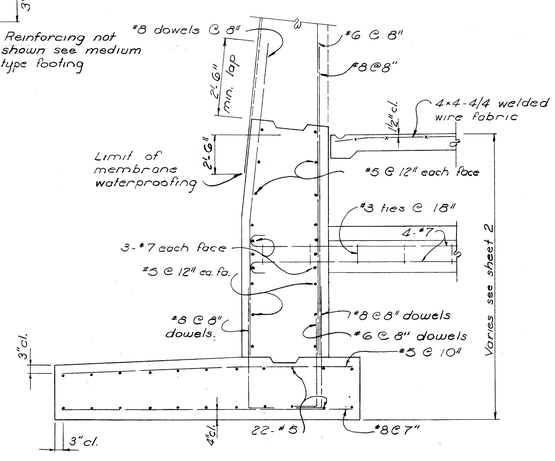

EARTH

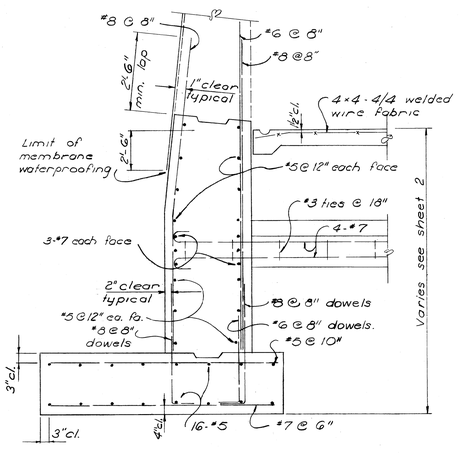

ROCK

DEEP TYPE FOOTING

ARCH WALL FOOTINGS
SCALE 1/2" = 1'-0"

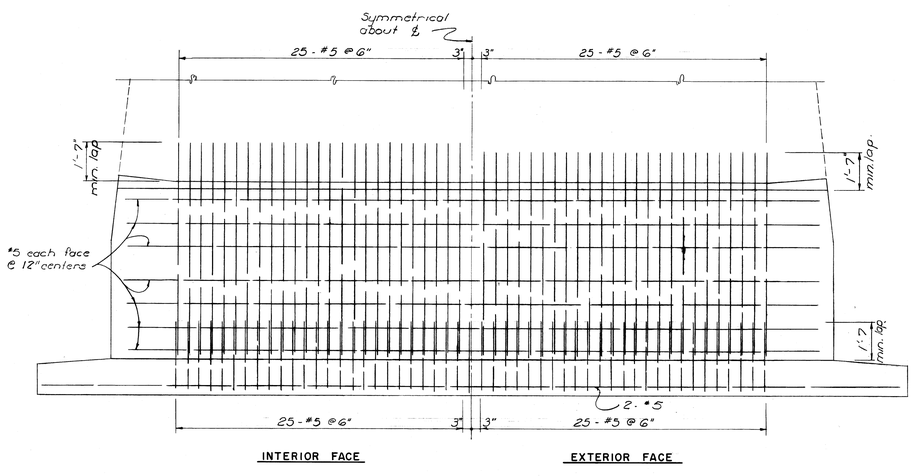

DEEP TYPE FOOTING

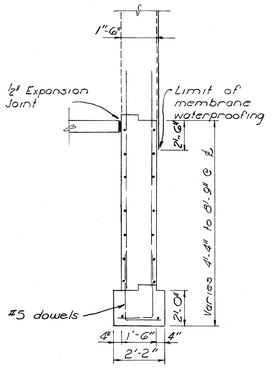

SECTION

REAR WALL FOOTINGS
SCALE 3/8" = 1'-0"

SYMBOL	DESCRIPTION	DATE	APPROVAL

REVISIONS

BLACK & VEATCH
CONSULTING ENGINEERS
KANSAS CITY, MISSOURI

DEPARTMENT OF THE ARMY
OFFICE OF THE CHIEF OF ENGINEERS
MILITARY CONSTRUCTION—ENGINEERING DIVISION
WASHINGTON, D. C.

DRAWN BY: G.I.C.
TRACED BY: G.I.C.
CHECKED BY: J.E.R.
SUBMITTED BY: [signature] BLACK & VEATCH
APPROVED: [signature] CHIEF STRUCTURES BRANCH
APPROVED: [signature] CHIEF, ENGINEERING DIVISION, MIL. CONSTR., O.C.E.
DATE: 3 FEB 1958
APPROVED FOR:
DATE:

MAGAZINE, STRADLEY TYPE
EARTH COVERED
ATOMIC BLAST RESISTANT
REINFORCING DETAILS
ARCH AND REAR WALL FOOTINGS

SCALE: AS NOTED
SPEC. NO. 33-15-58-57-CE
DRAWING NUMBER 33-15-58
SHEET 4

FILMED