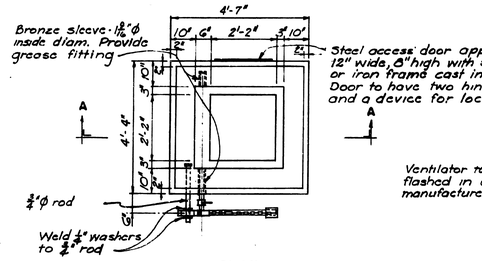

PLAN
SCALE 1/2" = 1'-0"

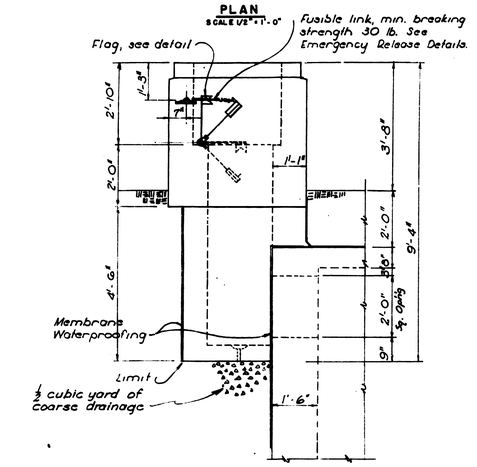

ELEVATION
SCALE 1/2" = 1'-0"

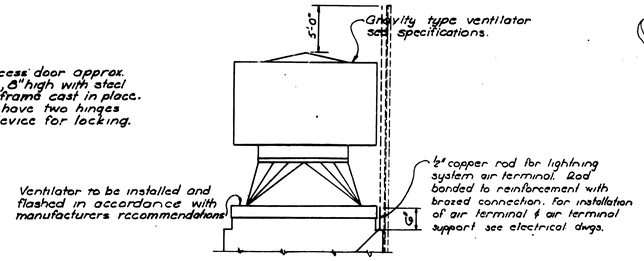

GRAVITY TYPE VENTILATOR
NOT TO SCALE

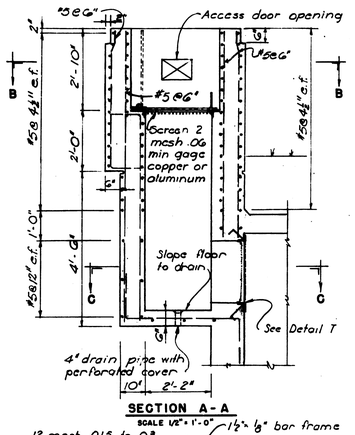

SECTION A-A
SCALE 1/2" = 1'-0"

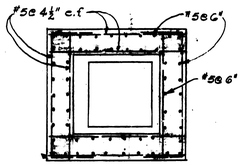

SECTION B-B
SCALE 1/2" = 1'-0"

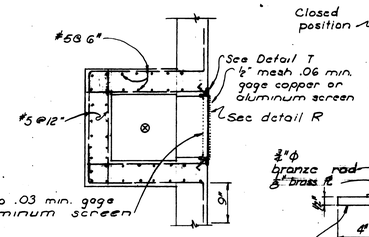

SECTION C-C
SCALE 1/2" = 1'-0"

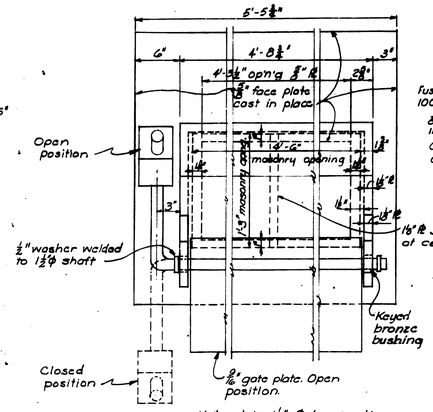

Note: Join 1/8" PL by continuous tight weld.

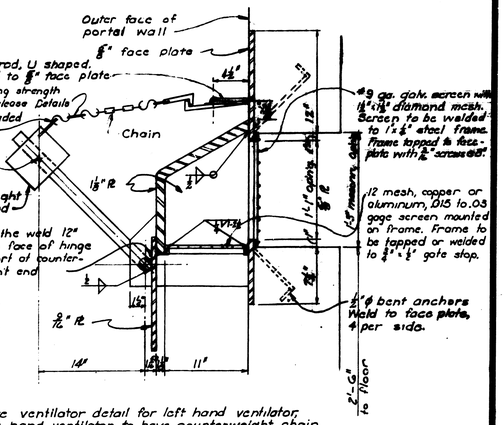

Note:
1. Above ventilator detail for left hand ventilator, right hand ventilator to have counterweight, chain etc. on right side.
2. Cement 3/8" thick neoprene sheet gasket to seat of closure of ventilator.

PORTAL WALL VENTILATOR
SCALE 1 1/2" = 1'-0"

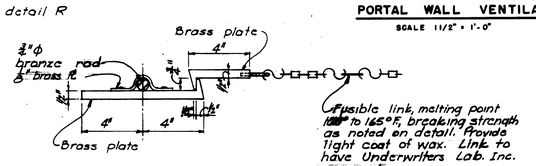

SECTION

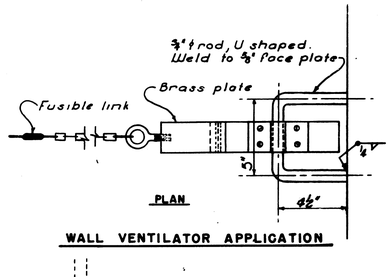

PLAN

WALL VENTILATOR APPLICATION

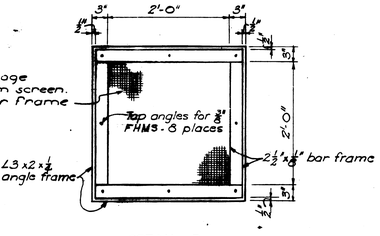

DETAIL R
SCALE 3/4" = 1'-0"

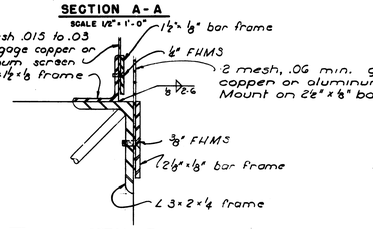

DETAIL T
SCALE 1/2" = 1'

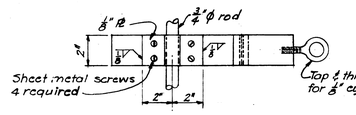

PLAN

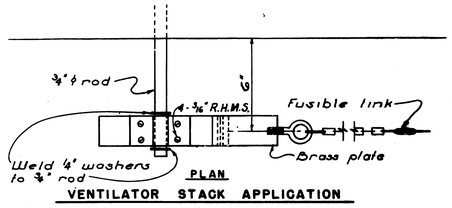

PLAN

VENTILATOR STACK APPLICATION

EMERGENCY RELEASE DETAILS
SCALE: 3" = 1'-0"

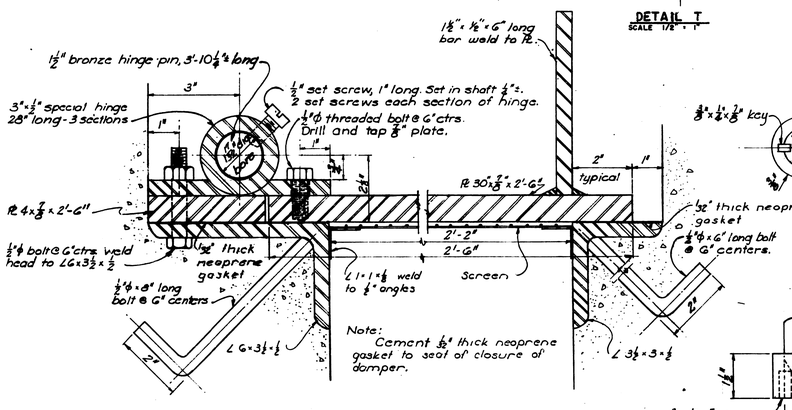

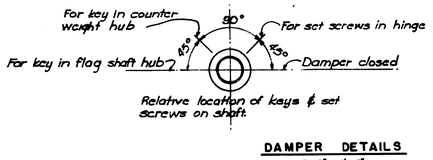

DAMPER DETAILS
SCALE 6" = 1'-0"

VENTILATOR STACK DETAILS

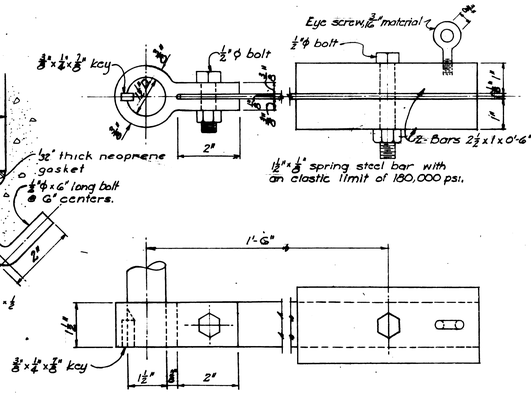

DETAIL OF COUNTERWEIGHT
SCALE 6" = 1'-0"

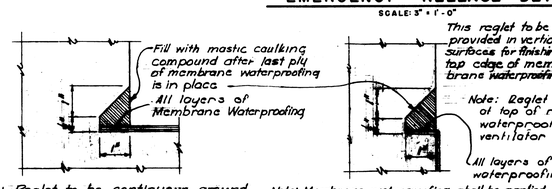

Note: Reglet to be continuous around intersection of portal wall with arch of structure.

Note: Membrane waterproofing shall be applied to all surfaces which will be in contact with earth cover, except as noted. Waterproofing coating shall be applied to the portal wall as specified.

REGLET DETAILS
SCALE 1/2" = 1"

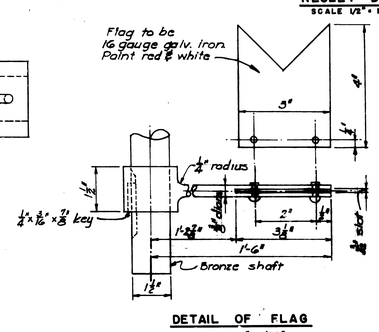

DETAIL OF FLAG
SCALE 6" = 1'-0"

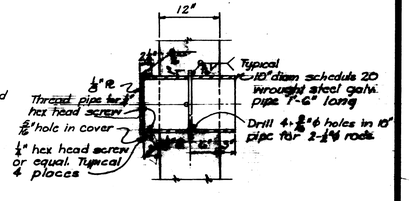

PURGE PIPE DETAIL
SCALE 1" = 1'-0"

SYMBOL	DESCRIPTION	DATE	APPROVAL
	REVISIONS		

BLACK & VEATCH
CONSULTING ENGINEERS
KANSAS CITY, MISSOURI

DEPARTMENT OF THE ARMY
OFFICE OF THE CHIEF OF ENGINEERS
MILITARY CONSTRUCTION — ENGINEERING DIVISION
WASHINGTON, D. C.

DRAWN BY: VDR
TRACED BY: VDR
CHECKED BY: HLC
SUBMITTED BY: Black & Veatch, NAME & VEATCH
APPROVED: CHIEF STRUCTURES BRANCH
APPROVED: CHIEF, ENGINEERING DIVISION, MR. CONSTR. O.C.E.
APPROVED FOR:
DATE:

MAGAZINE, STRADLEY TYPE
EARTH COVERED
ATOMIC BLAST RESISTANT
VENT AND MISCELLANEOUS DETAILS

DATE: 3 FEB 1958
SCALE: AS NOTED
SPEC. NO. 33-15-58-57-CE
DRAWING NUMBER 33-15-58
SHEET 5

FILMED