8-8-57

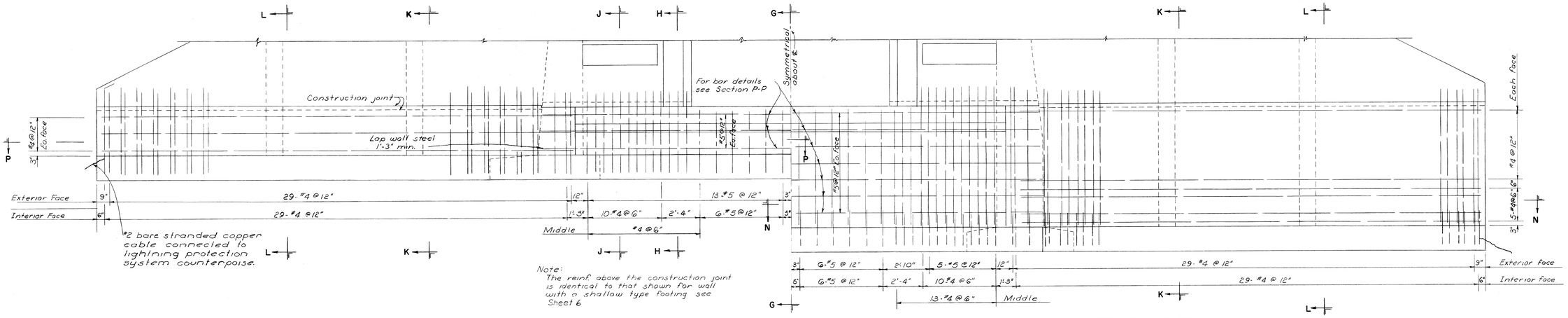

MEDIUM TYPE FOOTING

ELEVATION

SCALE 3/8" = 1'-0"

DEEP TYPE FOOTING

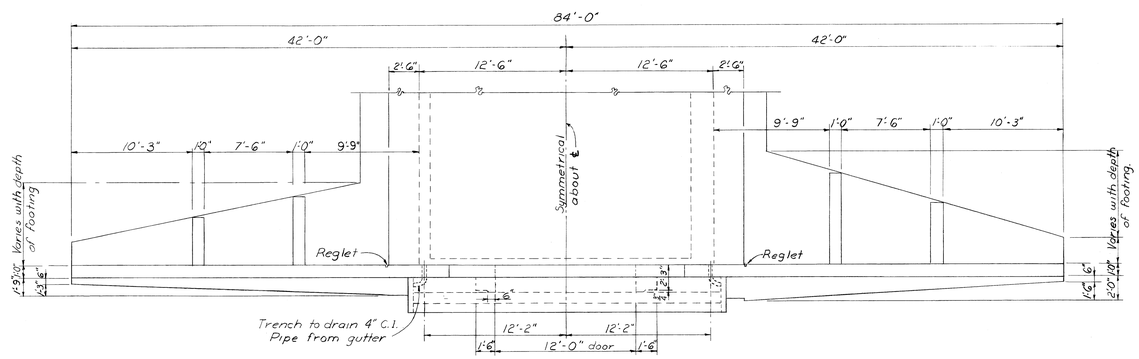

MEDIUM TYPE FOOTING

DEEP TYPE FOOTING

PLAN

SCALE 3/16" = 1'-0"

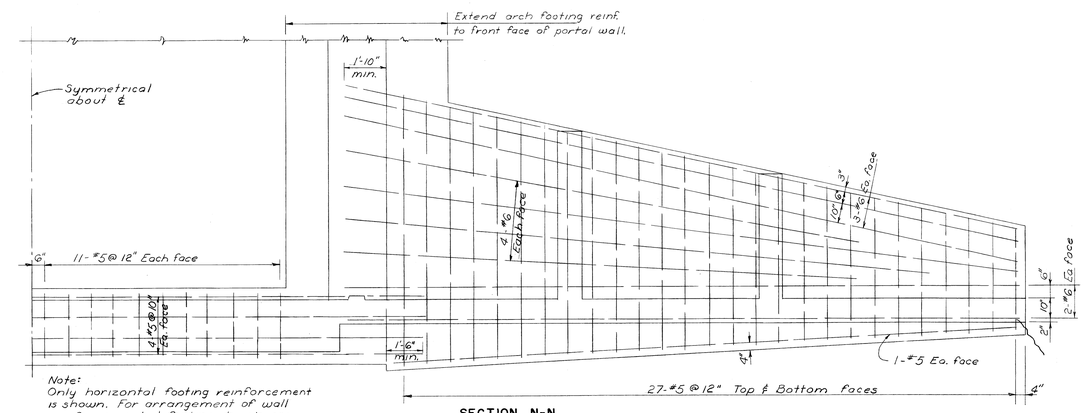

SECTION N-N

DEEP TYPE FOOTING

SCALE 3/8" = 1'-0"

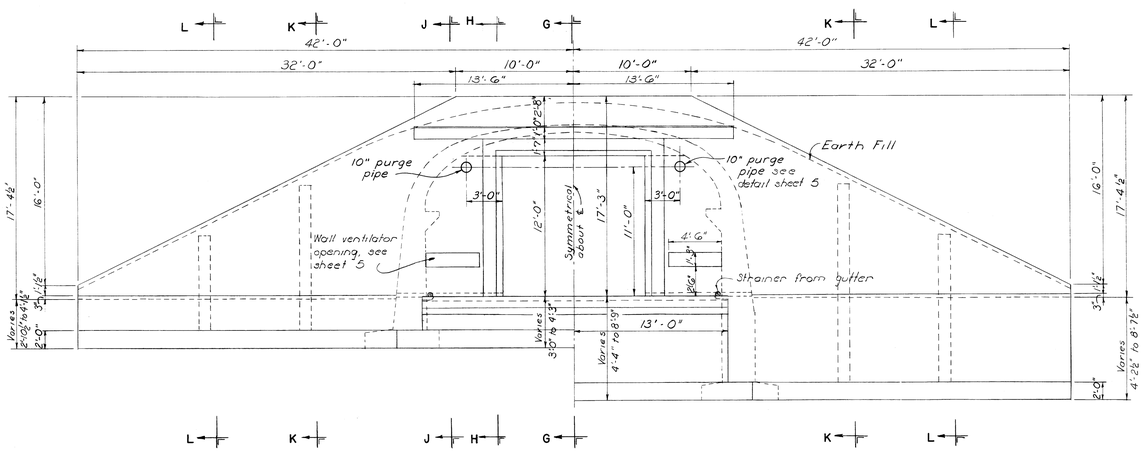

MEDIUM TYPE FOOTING

DEEP TYPE FOOTING

ELEVATION

SCALE 3/16" = 1'-0"

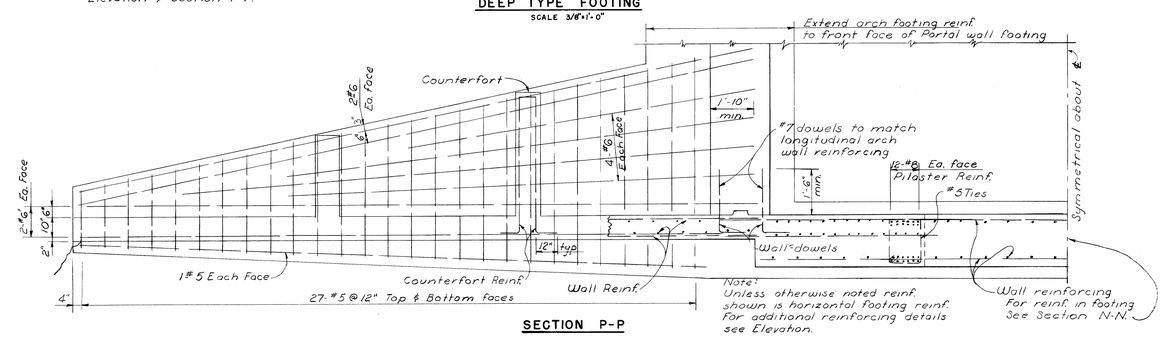

SECTION P-P

MEDIUM TYPE FOOTING

SCALE 3/8" = 1'-0"

Notes:

1. For additional portal wall details see Sheet 6 & Sheet 9
2. For portal wall general notes see Sheet 6
3. Where intermediate type arch footing is used, medium type portal wall footing shall be used. See Sheet 8

SYMBOL	DESCRIPTION	DATE	APPROVAL

REVISIONS

BLACK & VEATCH
CONSULTING ENGINEERS
KANSAS CITY, MISSOURI

DEPARTMENT OF THE ARMY
OFFICE OF THE CHIEF OF ENGINEERS
MILITARY CONSTRUCTION — ENGINEERING DIVISION
WASHINGTON, D. C.

DRAWN BY: O.D.P.
TRACED BY: O.D.P.
CHECKED BY: H.L.C.
SUBMITTED BY: Black & Veatch

MAGAZINE, STRADLEY TYPE
EARTH COVERED
ATOMIC BLAST RESISTANT
PORTAL DETAILS
MEDIUM & DEEP TYPE FOOTINGS

APPROVED: CHIEF STRUCTURES BRANCH
APPROVED: CHIEF, ENGINEERING DIVISION, MIL. CONSTR., O.C.E.
DATE: 3 FEB 1958
APPROVED FOR:
DATE:
SCALE: AS NOTED
SPEC. NO. 33-15-58-57-CE
DRAWING NUMBER 33-15-58
SHEET 7

FILMED