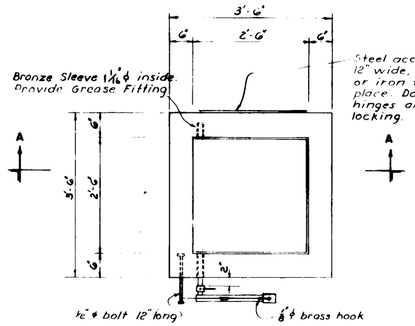

PLAN
SCALE 3/4" = 1'-0"

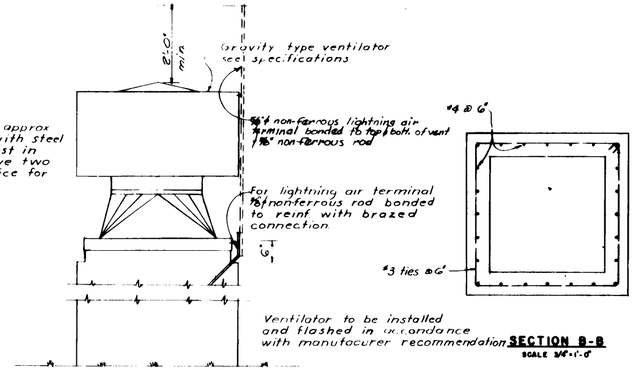

GRAVITY TYPE VENTILATOR
SCALE 3/4" = 1'-0"

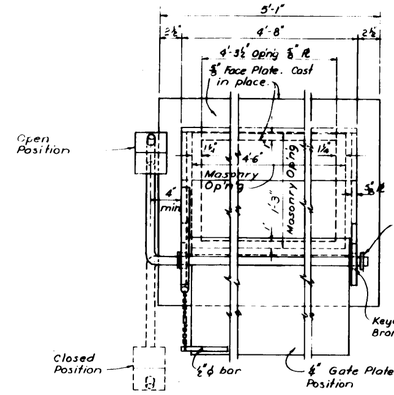

Note: Join 3/8" R by continuous tight weld.

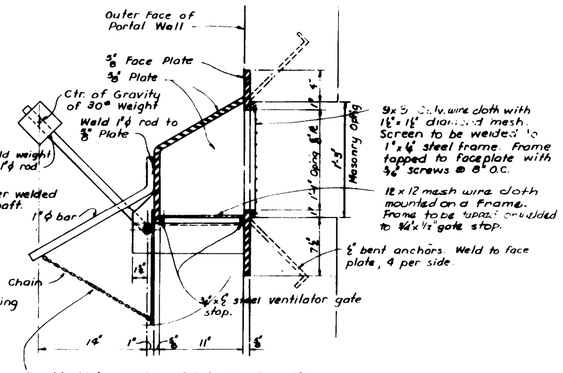

Fusible Link, Melting Point 160° to 165° F, Breaking strength 30# minimum. Provide light coat of wax. Link to have Underwriters Lab. Inc. approval.

Note:
1. Above ventilator detail for left hand ventilator, right hand ventilator to have counterweight, chain etc. on right side.
2. Travel of door stops 1" from 1" ϕ ventilator door hold open arm

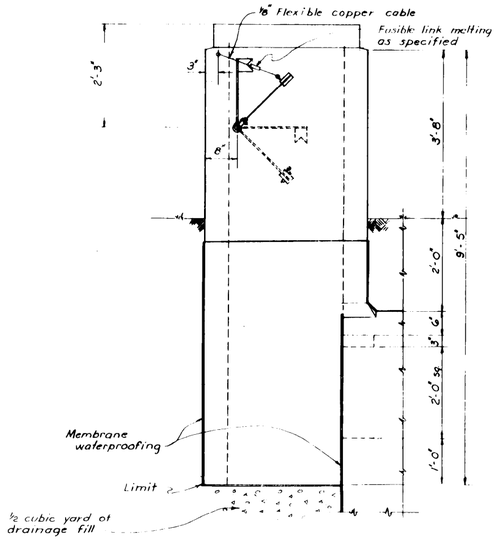

ELEVATION
SCALE 3/4" = 1'-0"

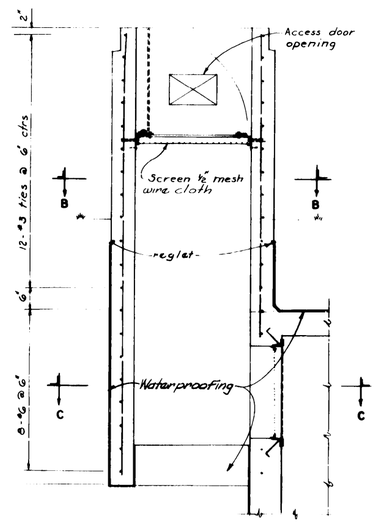

SECTION A - A
SCALE 3/4" = 1'-0"

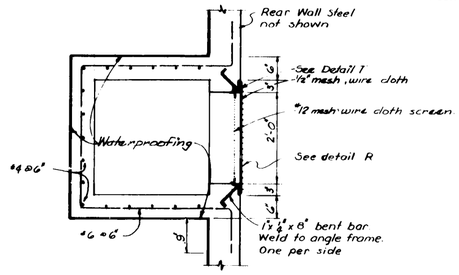

SECTION C-C
SCALE 3/4" = 1'-0"

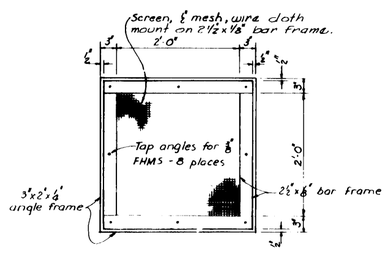

DETAIL R
SCALE 3/4" = 1'-0"

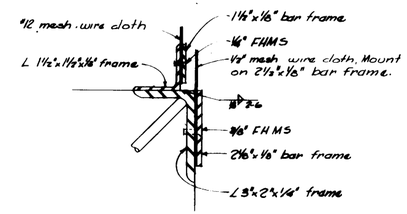

DETAIL T
SCALE 1/2" = 1"

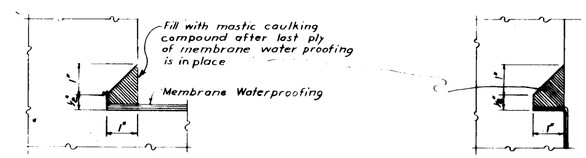

Note: Reglet to be continuous around intersection of Portal wall with arch of structure.

Note: This reglet to be provided in vertical surfaces for finishing top edge of membrane waterproofing

Note: Membrane waterproofing shall be applied to all surfaces which will be in contact with earth cover, except as noted.

REGLET DETAILS
SCALE 1/2" = 1"

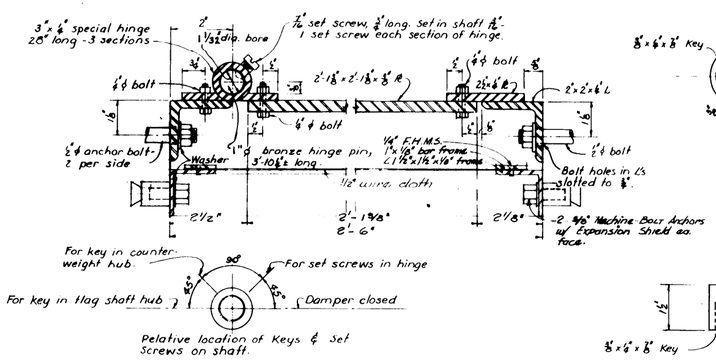

DAMPER DETAILS
SCALE 6" = 1'-0"

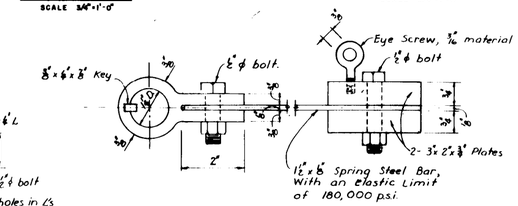

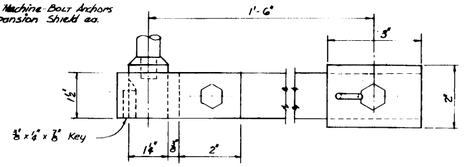

DETAIL OF COUNTERWEIGHT
SCALE 6" = 1'-0"

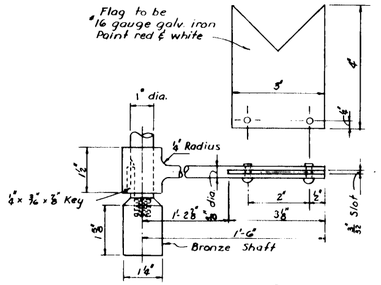

DETAIL OF FLAG
SCALE 6" = 1'-0"

VENTILATOR STACK DETAILS

SYMBOL	DESCRIPTION	DATE	APPROVAL

REVISIONS

BLACK & VEATCH
CONSULTING ENGINEERS
KANSAS CITY, MISSOURI

DEPARTMENT OF THE ARMY
OFFICE OF THE CHIEF OF ENGINEERS
MILITARY CONSTRUCTION — ENGINEERING DIVISION
WASHINGTON, D. C.

DRAWN BY: R.F.W.
TRACED BY: R.F.W.
CHECKED BY: J E R
SUBMITTED:
APPROVED:
CHIEF, TECHNICAL BRANCH
APPROVED FOR:
DATE:

MAGAZINE, STRADLEY TYPE
EARTH COVERED
VENT AND MISCELLANEOUS DETAILS

APPROVED:
CHIEF, ENGINEERING DIVISION MILITARY CONSTRUCTION S. & S.
DATE: 30 DEC 195_

SCALE: AS NOTED
SPEC. NO. 33-15-61-59-CE
DRAWING NUMBER
SHEET 5
33-15-61

THIS DWG. FORMERLY YT-105