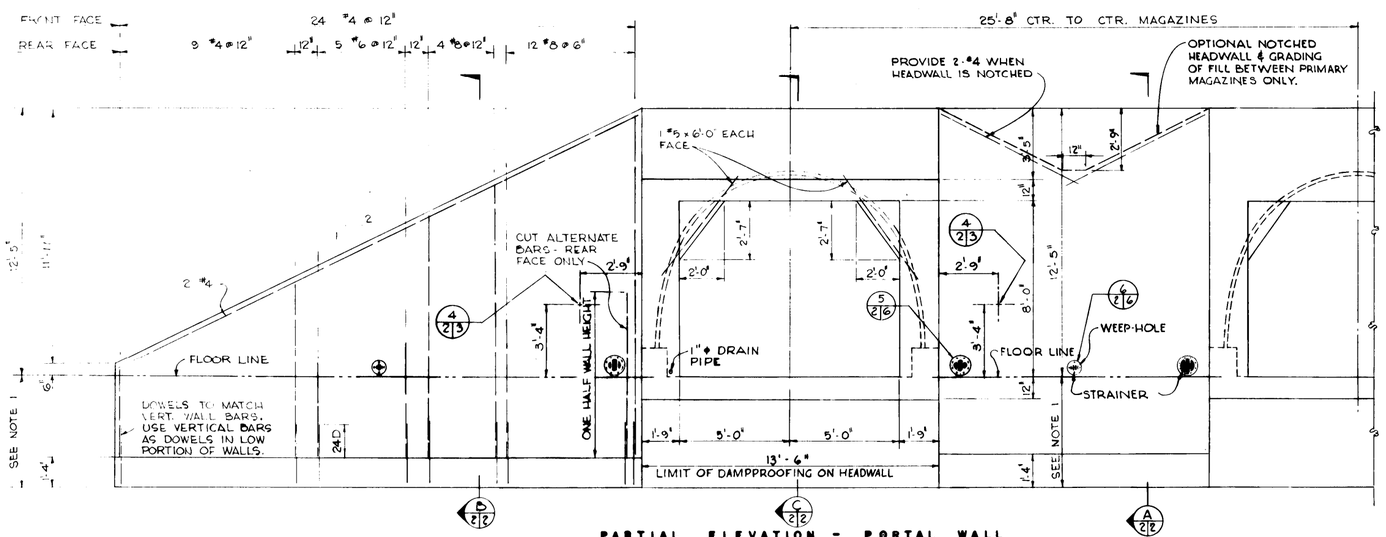

PARTIAL ELEVATION - PORTAL WALL
SCALE 3/8" = 1'-0"

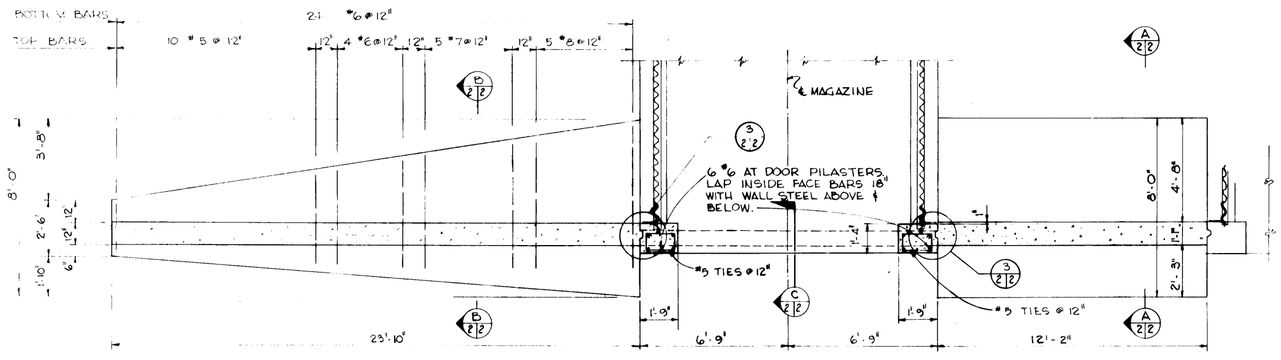

PARTIAL PLAN - PORTAL WALL
SCALE 3/8" = 1'-0"

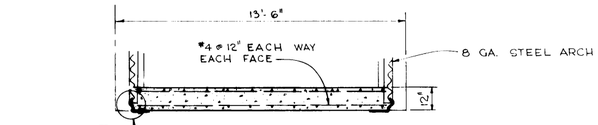

PLAN - REAR WALL
SCALE 3/8" = 1'-0"

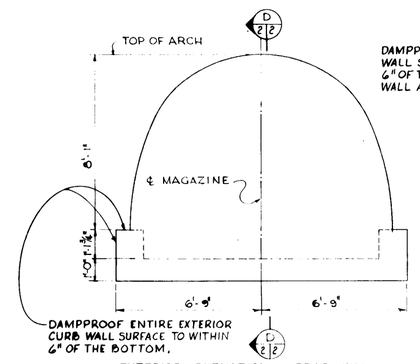

EXTERIOR ELEVATION - REAR WALL
SCALE 3/8" = 1'-0"

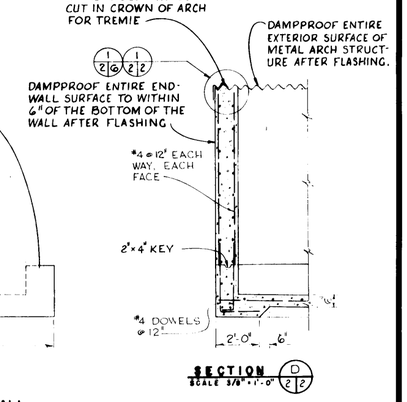

SECTION
SCALE 3/8" = 1'-0"

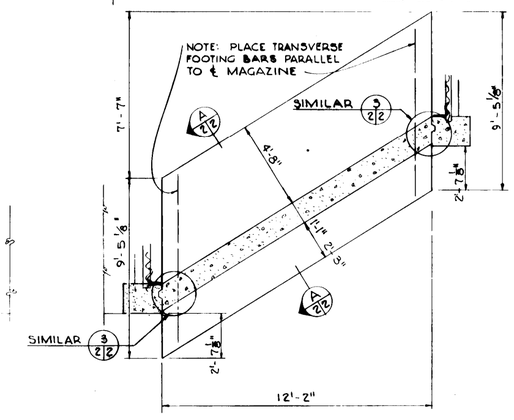

PLAN - PORTAL WALL, SKEWED SECTION
SCALE 3/8" = 1'-0"

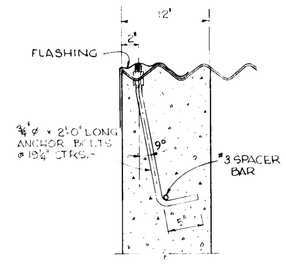

DETAIL
SCALE 1 1/2" = 1'-0"

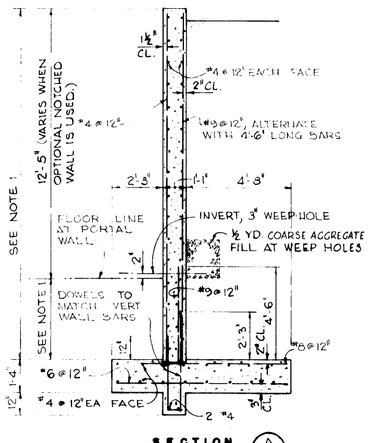

SECTION
SCALE 3/8" = 1'-0"

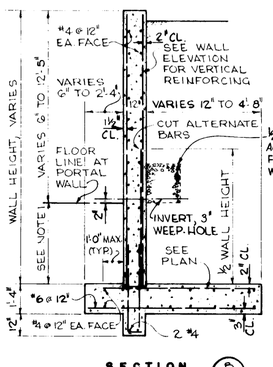

SECTION
SCALE 3/8" = 1'-0"

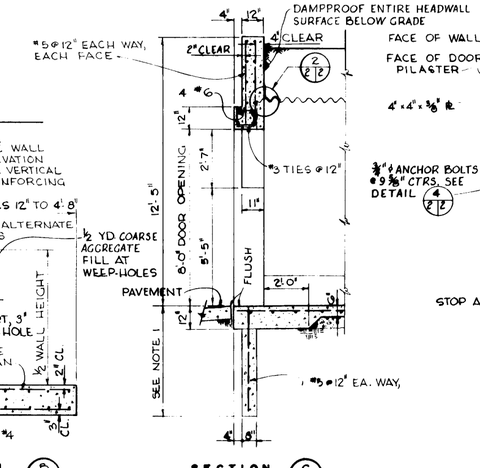

SECTION
SCALE 3/8" = 1'-0"

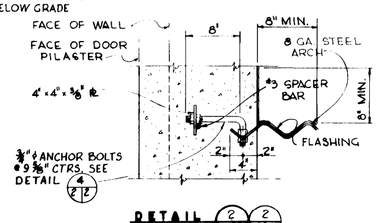

DETAIL
SCALE 1 1/2" = 1'-0"

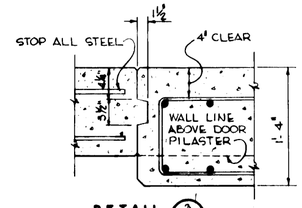

DETAIL
SCALE 1 1/2" = 1'-0"

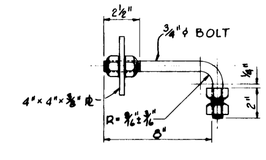

DETAIL
SCALE 1 1/2" = 1'-0"

NOTES

1. THE BOTTOM OF RETAINING WALL FOOTINGS SHALL BE AT A DEPTH EQUIVALENT TO THE LOCAL FROST PENETRATION DEPTH, & IN NO CASE LESS THAN 2'-6". WHERE STEPS ARE NECESSARY, THEY SHALL BE 2 x HORIZONTAL TO 1 x VERTICAL.

2. REAR WALL IS APPLICABLE TO PRIMARY MAGAZINES ONLY.

3. SOIL BEARING PRESSURE UNDER FOOTINGS MUST BE SUITABLE FOR 3000# PER SQ. FT. BEARING WITH INSIGNIFICANT SETTLEMENT AT THIS PRESSURE OR FOOTING MUST BE REDESIGNED.

4. ALL REINFORCING BAR LAPS AND SPLICES TO BE 30 d MINIMUM.

5. REINFORCING STEEL, EMBEDDED METAL, AND METAL ARCH SHALL BE MADE ELECTRICALLY CONTINUOUS BY TYING, CLIPPING, BOLTING OR WELDING.

GRAPHIC SCALES

3/8" = 1'-0" 0 1' 2' 3' 4' 5' 6' 7' 8'

1 1/2" = 1'-0" 0 3" 6" 9" 1' 2'

SYMBOL	DESCRIPTION	DATE	APPROVAL
	GENERAL REVISIONS	8 MAY 64	

REVISIONS

BLACK & VEATCH
CONSULTING ENGINEERS
KANSAS CITY, MISSOURI

DEPARTMENT OF THE AIR FORCE
OFFICE OF THE CHIEF OF ENGINEERS
WASHINGTON, D.C.

DRAWN BY: HDL
TRACED BY: HDL
CHECKED BY: WVH
SUBMITTED BY:
APPROVED BY: CHIEF, DESIGN BRANCH
APPROVED BY: CHIEF, ENGINEERING DIVISION, MIL. CONST., O.C.E.
APPROVED BY: CHIEF OF STAFF, U. S. AIR FORCE
DATE 7 MARCH 1963

IGLOO, STORAGE
STEEL ARCH - EARTH MOUNDED
(ADC TYPE)

FRONT AND REAR WALL DETAILS

DATE: 6 MARCH 1963
SCALE: AS SHOWN
SPEC. NO. 33-15-63-62
DRAWING NUMBER
SHEET 2 AW 33-15-63

LIMITED REFERENCE DESIGN

FILMED