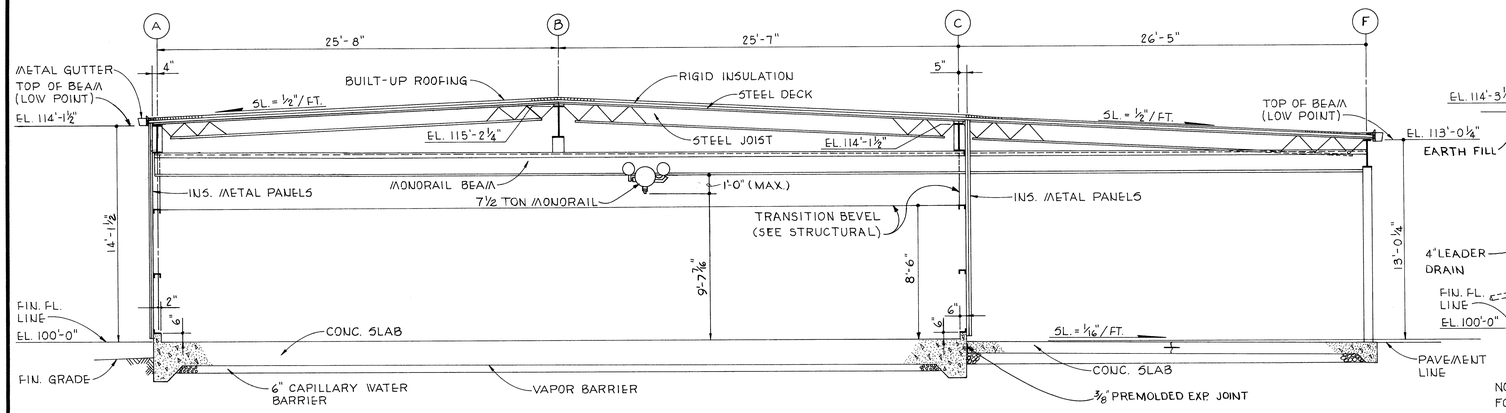

CROSS SECTION (B/3|6)

SCALE: ¼ INCH = 1 FOOT

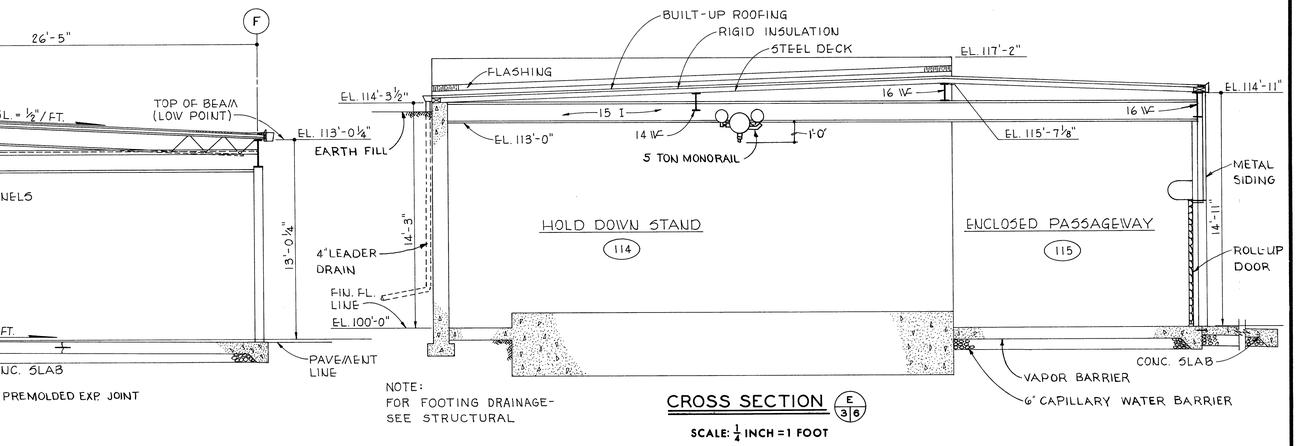

NOTE:
FOR FOOTING DRAINAGE-
SEE STRUCTURAL

CROSS SECTION (E/3|6)

SCALE: ¼ INCH = 1 FOOT

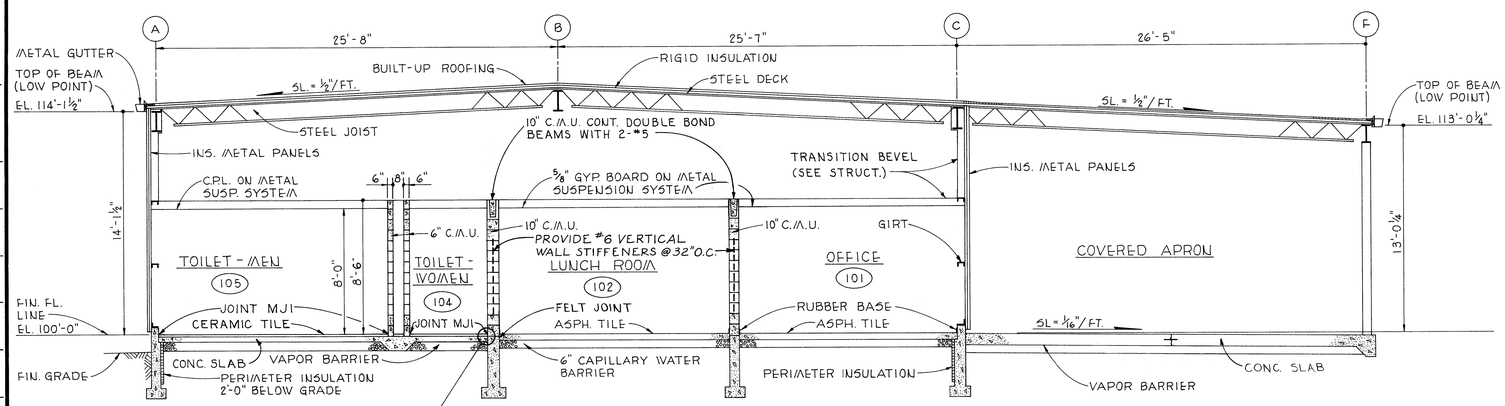

CROSS SECTION (C/3|6)

SCALE: ¼ INCH = 1 FOOT

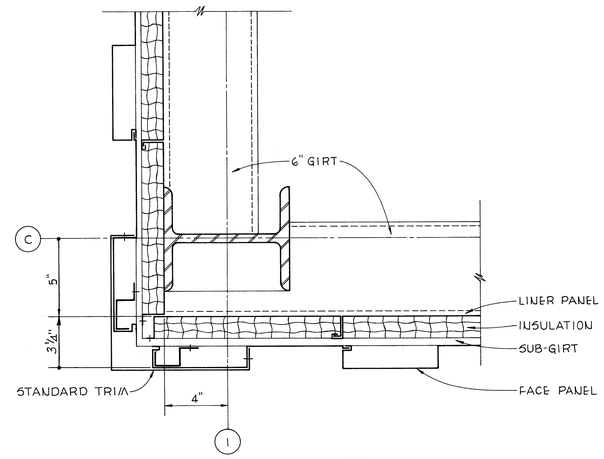

DETAIL (1/3|6)

SCALE: 3 INCHES = 1 FOOT

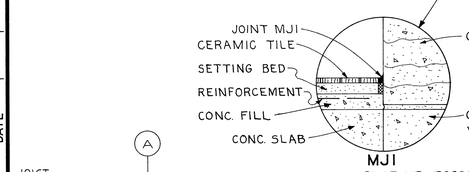

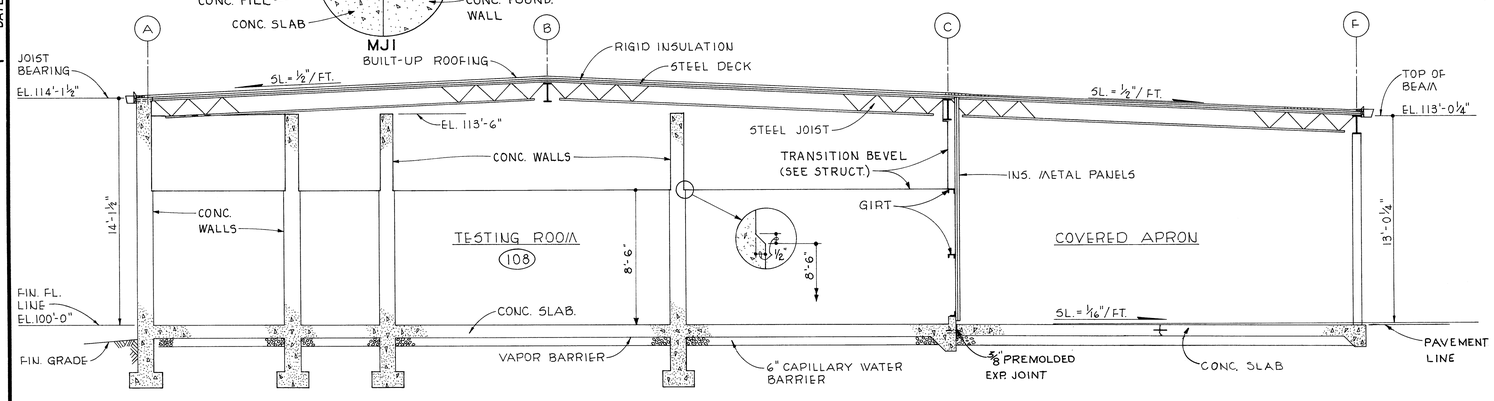

CROSS SECTION (D/3|6)

SCALE: ¼ INCH = 1 FOOT

12' 0 5'

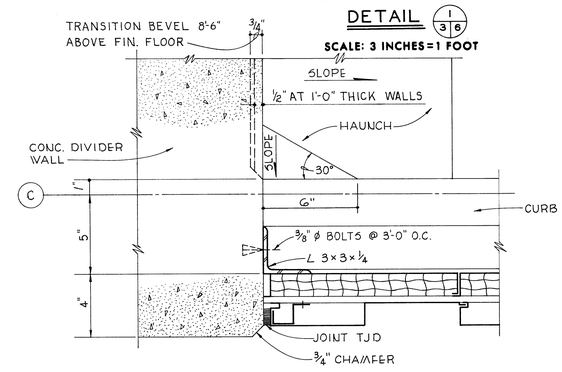

DETAIL (2/3|6)

SCALE: 3 INCHES = 1 FOOT

0 3" 6" 12"

SYMBOL	DESCRIPTION	DATE	APPROVAL

REVISIONS

U S ARMY ENGINEER DISTRICT, OMAHA
CORPS OF ENGINEERS
OMAHA, NEBRASKA

DEPARTMENT OF THE ARMY
OFFICE OF THE CHIEF OF ENGINEERS
MILITARY CONSTRUCTION-ENGINEERING DIVISION
WASHINGTON, DC

DRAWN BY: R.D.H.
DESIGNED BY: G.J.B.

GM-HVY ROCKET AMMO MAINTENANCE FACILITY

SECTIONS & DETAILS

SUBMITTED: Charles R. Lloyd, CHIEF ENGINEERING DIV.
RECOMMENDED: LTC, CE, COL. C OF E DISTRICT ENGINEER
APPROVED: Norman G. Hansen, CHIEF, STATES BRANCH
APPROVED: R.B. Rechenberg, CHIEF ENGINEERING DIVISION MIL. CONSTR. OCE
DATE: 1 8 MAR 1966

APPROVED:

SCALE: AS SHOWN
SPEC. NO. 35-14-05-67 CE
DRAWING NUMBER
SHEET 6
35-14-05

A 105 Micro-master Film or A Paper Reproducible Record Copy Must Be Made Before Every Addendum and/or Modification

ADDENDA NO.	DATE	MODIFICATION	DATE