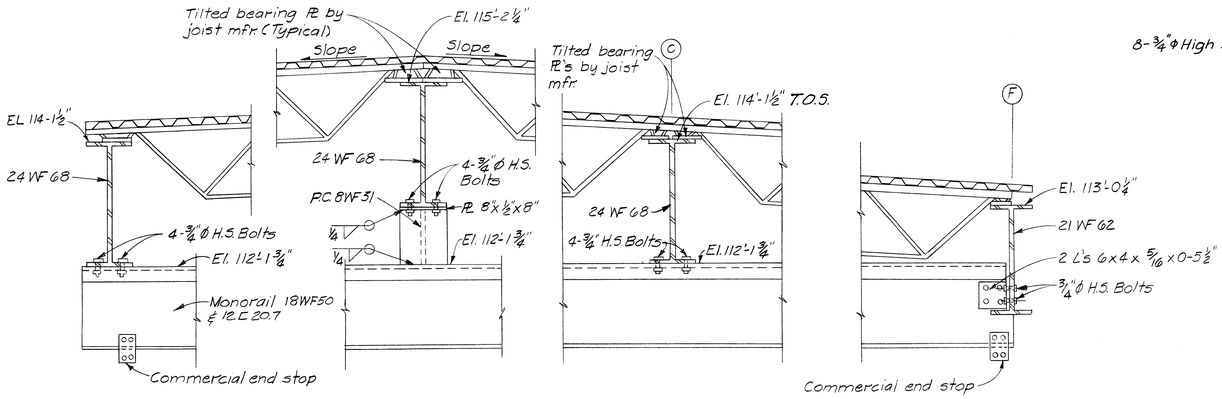

MONORAIL SUPPORT BEAM

SCALE: 1 INCH = 1 FOOT

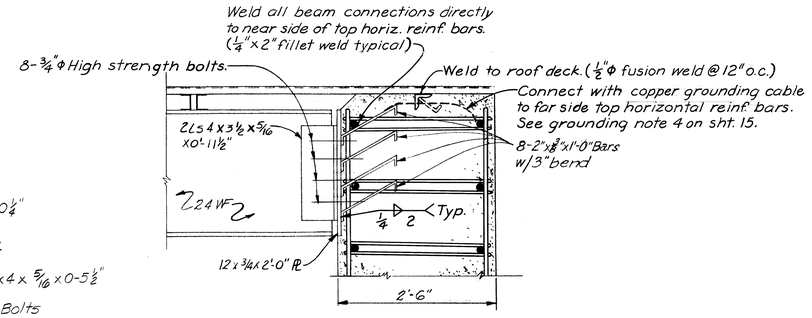

SECTION 9/13/18

SCALE: 1 INCH = 1 FOOT

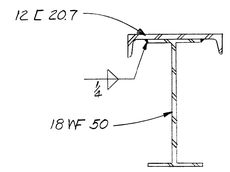

MONORAIL BEAM

No Scale

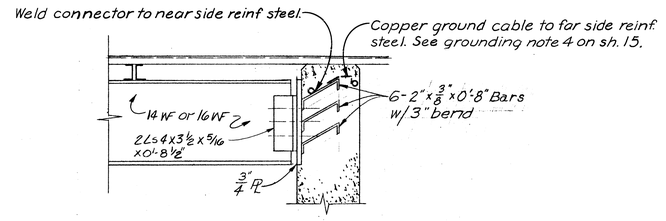

SECTION 10/13/18

SCALE: 1 INCH = 1 FOOT

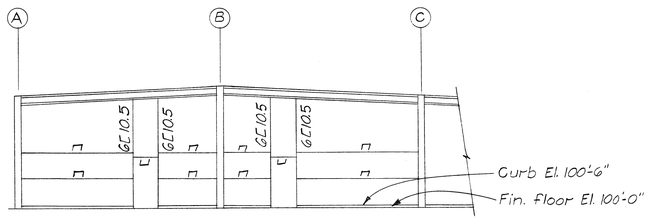

WALL FRAMING ELEVATION LINE "1"

SCALE: ⅛ INCH=1 FOOT

Wall Framing Notes:
1. Girts 6 C 8.2 unless noted.
2. Verticals are continuous.

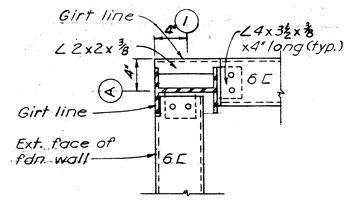

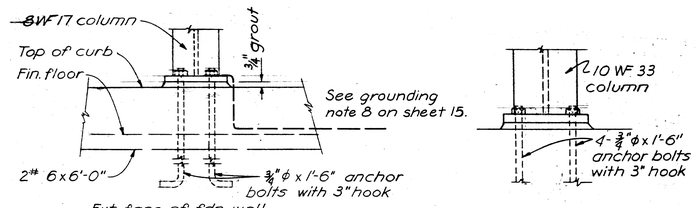

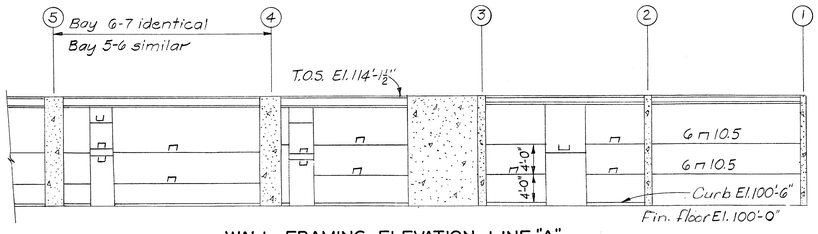

WALL FRAMING ELEVATION LINE "A"

SCALE: ⅛ INCH=1 FOOT

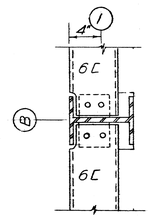

GIRT CONNECTION DETAILS

SCALE: 1½ INCHES = 1 FOOT

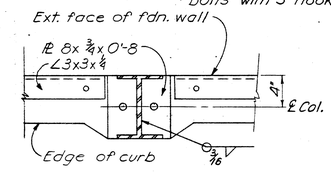

COLUMN BASE DETAIL 1/13/18

SCALE: 1½ INCHES = 1 FOOT

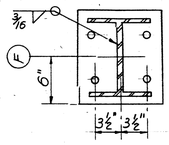

COLUMN BASE DETAIL 2/13/18

SCALE: 1½ INCHES = 1 FOOT

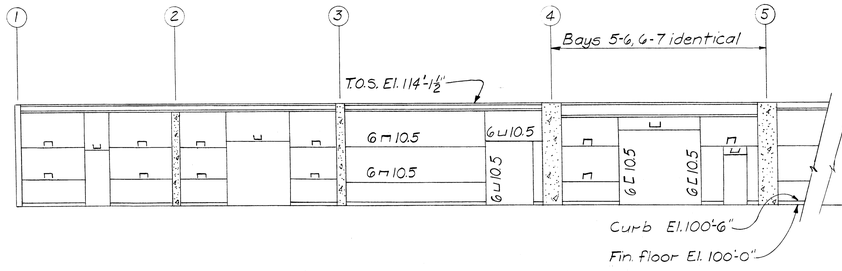

WALL FRAMING ELEVATION LINE "C"

SCALE: ⅛ INCH=1 FOOT

12" 0 5' 10' 15'

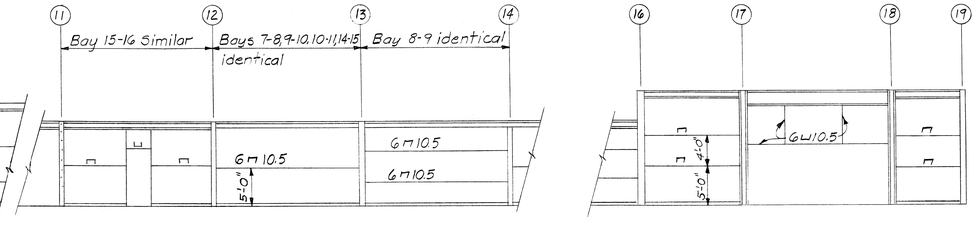

WALL FRAMING ELEVATION LINE E (PASSAGE WAY)

SCALE: ⅛ INCH=1 FOOT

SYMBOL	DESCRIPTION	DATE	APPROVAL

REVISIONS

U S ARMY ENGINEER DISTRICT, OMAHA
CORPS OF ENGINEERS
OMAHA, NEBRASKA

DEPARTMENT OF THE ARMY
OFFICE OF THE CHIEF OF ENGINEERS
MILITARY CONSTRUCTION-ENGINEERING DIVISION
WASHINGTON, DC

DRAWN BY: R. F. M.
DESIGNED BY: W. D. C.
SUBMITTED: Charles L. Hipp, CHIEF ENGINEERING DIV.
RECOMMENDED: COL. C. OF E DISTRICT ENGINEER
APPROVED: Norman G. Hansen, CHIEF MECH. BRANCH
APPROVED: R. P. Lochwood, CHIEF ENGINEERING DIVISION MIL CONSTR OCE
DATE 18 MAR 1966
APPROVED:

GM-HVY ROCKET AMMO MAINTENANCE FACILITY

FRAMING DETAILS

SCALE: AS SHOWN
SPEC. NO. 35-14-05-67 CE
DRAWING NUMBER
SHEET 18
35-14-05