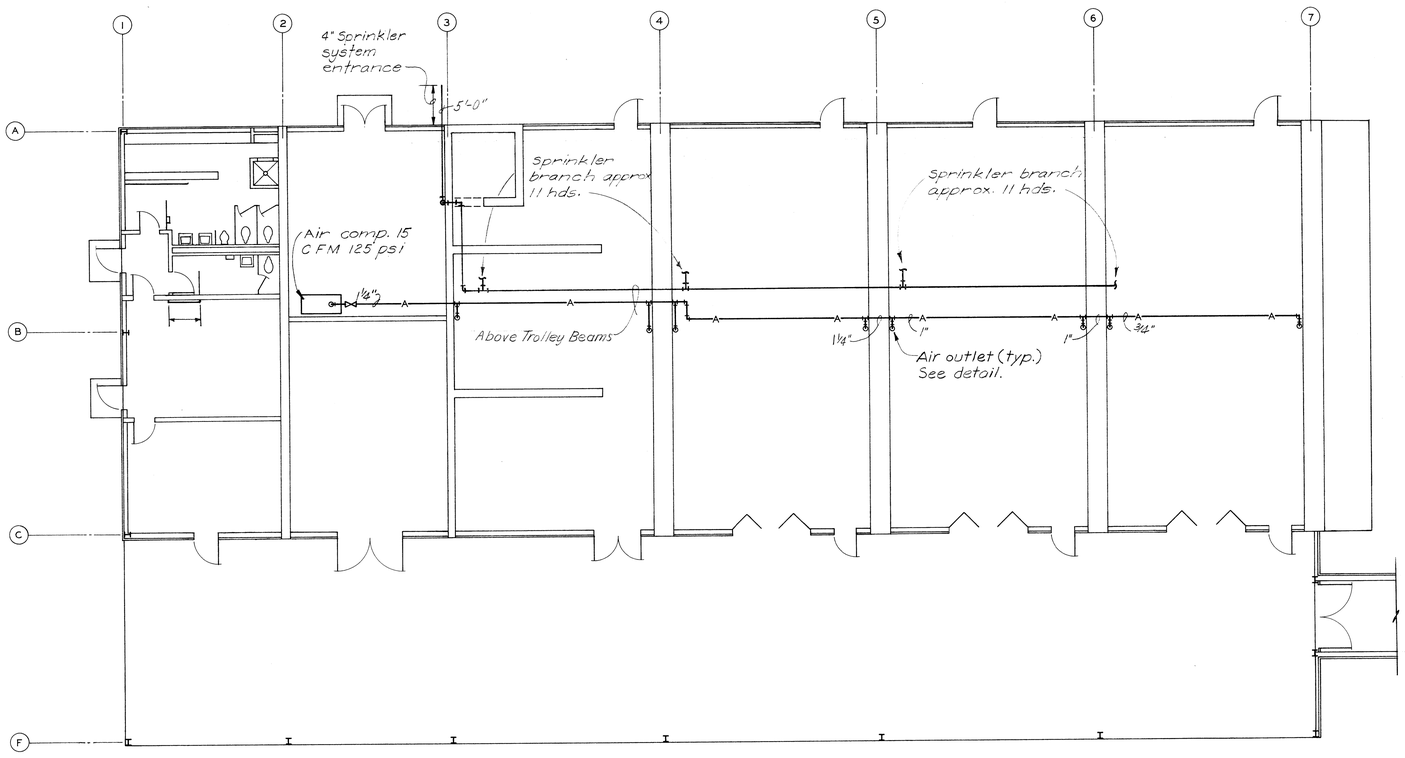

PLAN

SCALE: 1/8 INCH=1 FOOT

12" 0 5' 10' 15'

MECHANICAL LEGEND

HEATING

- HW — HOT WATER HEATING SUPPLY
- HWR — HOT WATER HEATING RETURN
- FOS — FUEL OIL SERVICE
- FOF — FUEL OIL FLOW
- FOR — FUEL OIL RETURN
- FOV — FUEL OIL TANK VENT
- (T) THERMOSTAT

MISCELLANEOUS PIPING

- A — COMPRESSED AIR

VALVES AND FITTINGS

- GATE VALVE
- CHECK VALVE
- STRAINER
- RELIEF VALVE (PRESS. AND/OR TEMP.)
- ELBOW DOWN
- ELBOW UP
- TEE DOWN
- TEE UP
- UNION

PLUMBING

- (CW) COLD WATER
- (HW) HOT WATER
- (W) WASTE
- (V) VENT
- WALL HYDRANT
- CO CLEAN OUT
- FLOOR DRAIN

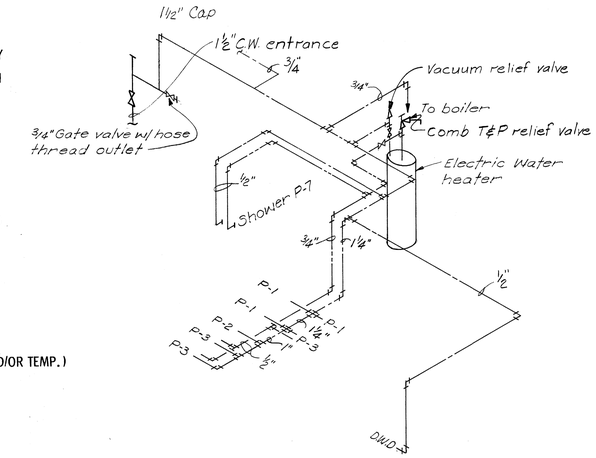

DOMESTIC WATER RISER DIAGRAM

NO SCALE

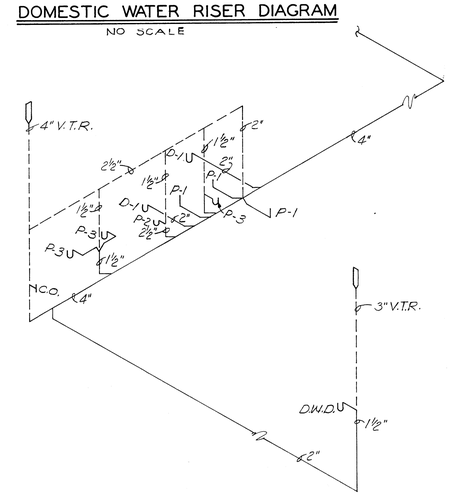

WASTE & VENT RISER DIAGRAM

NO SCALE

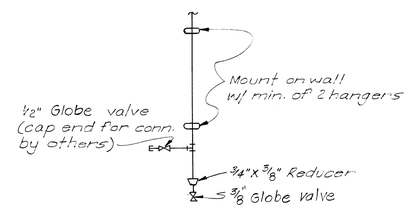

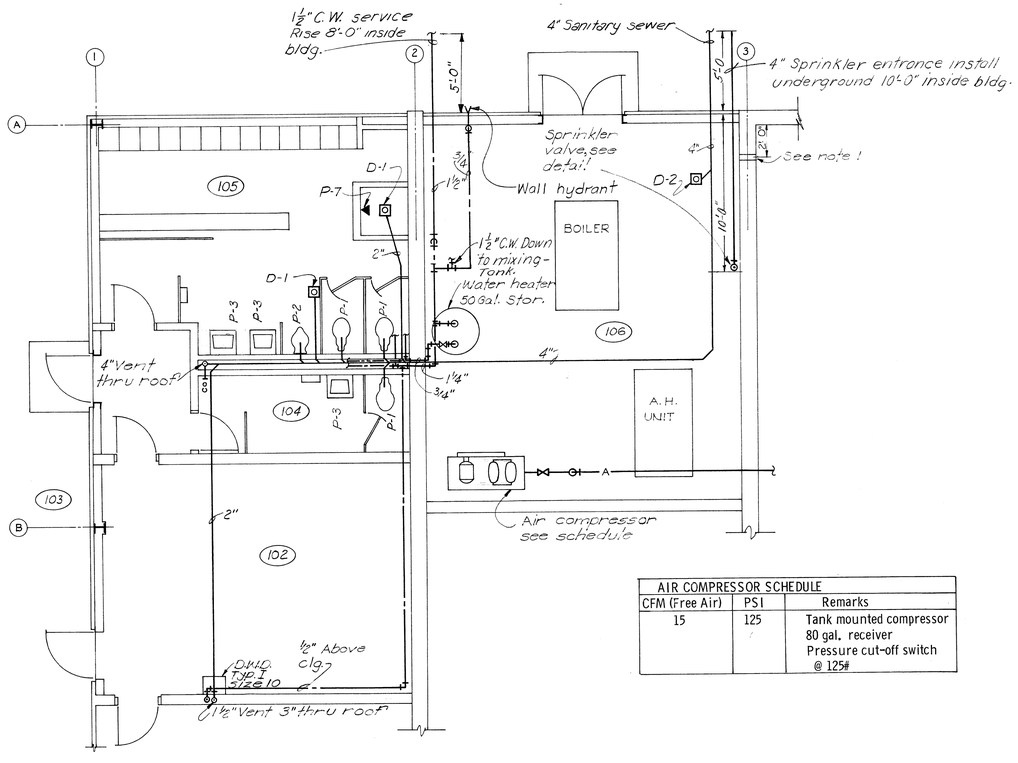

TOILET PLAN

SCALE: 1/4 INCH = 1 FOOT

12" 0 5'

AIR COMPRESSOR SCHEDULE		
CFM (Free Air)	PSI	Remarks
15	125	Tank mounted compressor 80 gal. receiver Pressure cut-off switch @ 125#

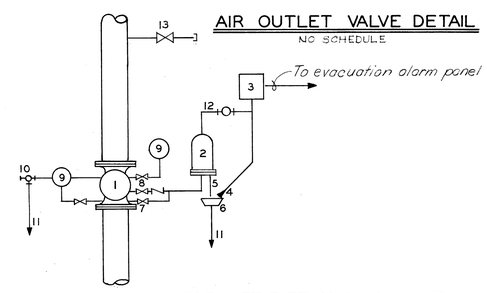

AIR OUTLET VALVE DETAIL

NO SCHEDULE

CONNECTION DIAGRAM FOR WET-PIPE ALARM VALVE

4" VALVE

1. ALARM CHECK VALVE
2. RETARDING CHAMBER
3. LOCAL ALARM EQUIPMENT
4. 1/8" COPPER TUBING
5. AUTOMATIC DRIP
6. DRIP CUP
7. ALARM TEST VALVE (NORMALLY SHUT)
8. ALARM SHUT-OFF VALVE AND CHECK VALVE (NORMALLY OPEN)
9. WATER PRESSURE GAGES
10. MAIN DRAIN VALVE
11. DRIP CUP AND MAIN DRAIN LINES TO FLOOR DRAIN
12. STRAINER
13. 1-1/2" GATE VALVE (FOR FUTURE CONNECTION)

NOTES:

1. Provide sleeve for 1-1/2" pipe 2' from wall 9'-0" above floor in walls at Col. Lines #3, #4, #5, #6.
2. Ordinary hazard sprinklers shall be provided in Rooms 108, 109, 110 and 111. The sprinkler layout shall conform to the requirements of NFPA Bulletin #13 with the number of heads shown.

SYMBOL	DESCRIPTION	DATE	APPROVAL

REVISIONS

U S ARMY ENGINEER DISTRICT, OMAHA
CORPS OF ENGINEERS
OMAHA, NEBRASKA

DEPARTMENT OF THE ARMY
OFFICE OF THE CHIEF OF ENGINEERS
MILITARY CONSTRUCTION-ENGINEERING DIVISION
WASHINGTON, DC

DRAWN BY: J.M.F. & P.E.J.
DESIGNED BY:
SUBMITTED: Charles D. Rhyne, CHIEF ENGINEERING DIV.
RECOMMENDED: COL. C OF E DISTRICT ENGINEER
APPROVED: CHIEF, UTILITIES BRANCH
APPROVED: CHIEF ENGINEERING DIVISION MIL. CONSTR. OCE
DATE: 19 MAR 1962

GM-HVY ROCKET AMMO MAINTENANCE FACILITY

MECHANICAL PLAN

SCALE: AS SHOWN
SPEC. NO. 35-14-05-67 CE
DRAWING NUMBER
SHEET 20
35-14-05