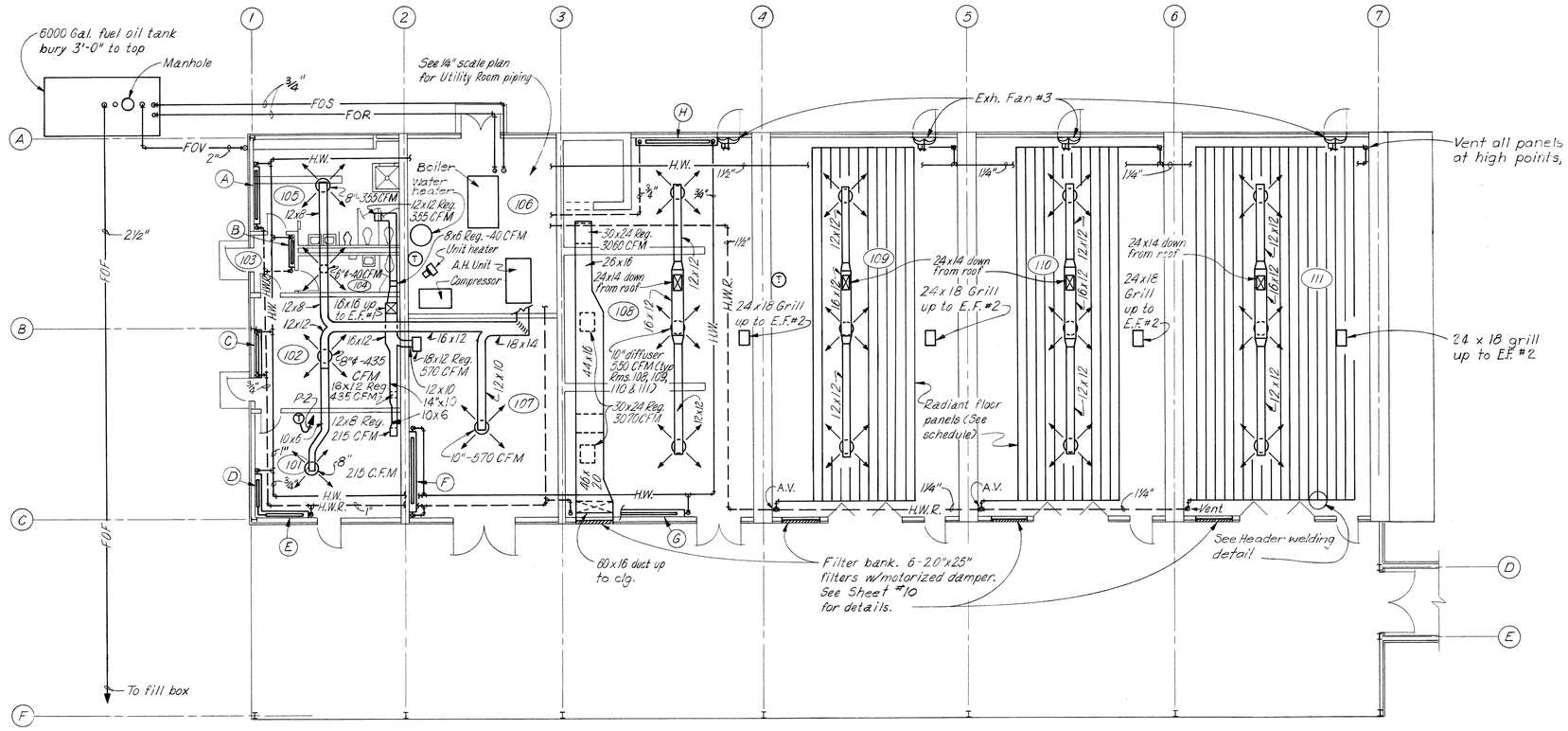

PLAN

SCALE: 1/8 INCH=1 FOOT

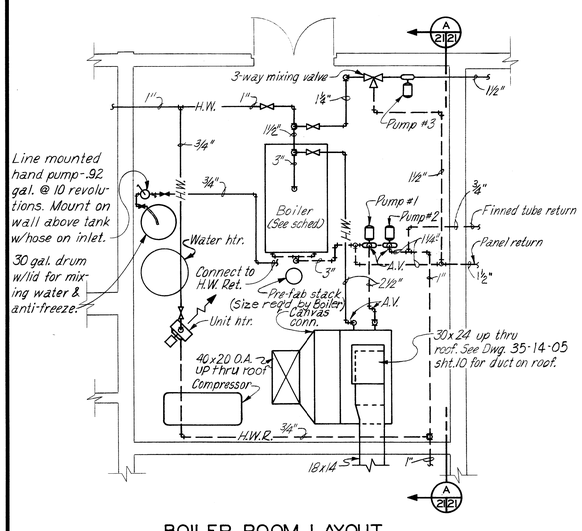

BOILER ROOM LAYOUT

SCALE: 1/4 INCH = 1 FOOT

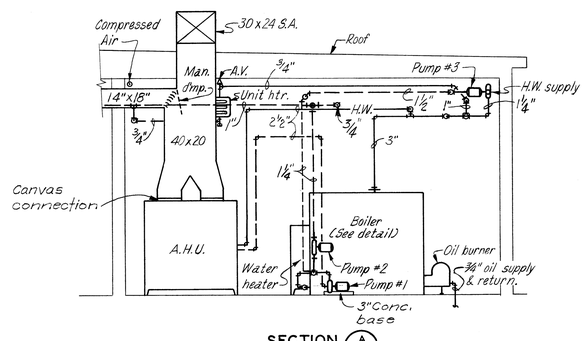

SECTION A 21/21

UTILITY ROOM

SCALE: 1/4 INCH = 1 FOOT

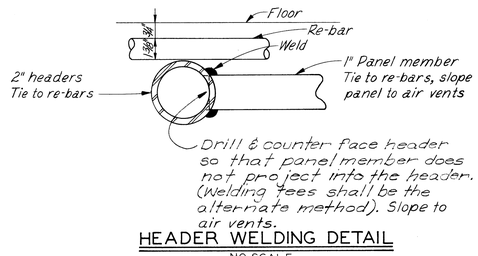

HEADER WELDING DETAIL

NO SCALE

NOTES:

1. Install 1-1/4" gate valve in supplies and 1-1/4" balancing cock in returns to all radiant panels 5'-0" above floor.

AIR HANDLING UNIT SCHEDULE

CFM	Ext. S.P.	Coil Face Vel.	E.A. Temp. °F.		Lv. Temp. °F.	Water Temp.	Filters	Remarks
8215	0.75"	500 F.P.M.	+4 Zone	+22 Zone	72° F.	190°F. Av.	2"-perm H-V	Face & By-Pass Damper

ANTI-FREEZE PROTECTION SCHEDULE

Zone	Total Gals. in System	Prot. to °F.	% Anti-freeze by Volume	Remarks
+4	383	-4° F.	35	% shown is based on Dow Therm SR-1 - correct as required. The total Gal. are for est. purpose only. The actual fill will be made to match the system installed.
+22	348	+12° F.	23	

FINNED TUBE RADIATION SCHEDULE

Mark	MBH Zone +4	MBH Zone +22	E.A. °F.	Av.W. Temp. °F.	Remarks
A	4.95	3.58	65°	190°	Knob Damper
B	2.78	2.37	65°	190°	Knob Damper
C	5.06	3.98	65°	190°	Knob Damper
D	3.00	3.00	65°	190°	Knob Damper
E	3.94	3.65	65°	190°	Knob Damper
F	8.76	6.43	65°	190°	Knob Damper
G	9.68	6.97	65°	190°	Knob Damper
H	9.68	6.97	65°	190°	Knob Damper

PUMP SCHEDULE

Pump No.	GPM +4 Zone	GPM +22 Zone	Ft. Head +4 Zone	Ft. Head +22 Zone	Remarks
1	75	50	10	9	Base mounted
2	18	12	7	6	In-line
3	23	17	10	7	In-line

RADIANT PANEL SCHEDULE

Room No.	Width of Panel +4 Zone	Width of Panel +22 Zone	Length	Remarks
109	1" pipe, 11 rows 15" C-C	1" pipe 8 rows 15" C-C	48 ft.	See Specs.
110	1" pipe 11 rows 15" C-C	1" pipe 8 rows 15" C-C	48 ft.	See Specs.
111	1" pipe 18 rows 15" C-C	1" pipe 14 rows 15" C-C	48 ft.	See Specs.

UNIT HEATER SCHEDULE

MBH +4 Zone	+22 Zone	Av. Water Temp.	Ent. Air Temp.
10.1	Not req'd.	190° F.	65° F.

HOT WATER BOILER SCHEDULE

IBR Gross Output MBH +4 Zone	IBR Gross Output MBH +22 Zone	Fuel	Remarks
887	663	#2 Oil	

EXHAUST FAN SCHEDULE

Mark	No. Req'd.	CFM	S.P.	Remarks
EF-1	1	1615	3/8	Roof mounted
EF-2	4	1650	1/8	Roof mounted
EF-3	4	9250	1/4	Side wall

SYMBOL	DESCRIPTION	DATE	APPROVAL

REVISIONS

U S ARMY ENGINEER DISTRICT, OMAHA
CORPS OF ENGINEERS
OMAHA, NEBRASKA

DEPARTMENT OF THE ARMY
OFFICE OF THE CHIEF OF ENGINEERS
MILITARY CONSTRUCTION-ENGINEERING DIVISION
WASHINGTON, DC

DRAWN BY: M.K.H.
DESIGNED BY: R.L.E.
SUBMITTED: Charles A. Bigge, CHIEF ENGINEERING DIV.
RECOMMENDED: COL. C OF E DISTRICT ENGINEER
APPROVED: CHIEF UTILITIES BRANCH
APPROVED: CHIEF ENGINEERING DIVISION MIL. CONSTR. OCE.
DATE: 1 8 MAR 1966
APPROVED:

GM-HVY ROCKET AMMO MAINTENANCE FACILITY

HEATING & VENTILATING PLANS, SECTION & SCHEDULES

SCALE: AS SHOWN
SPEC. NO. 35-14-05-67 CE
DRAWING NUMBER
SHEET 21
35-14-05