CORPS OF ENGINEERS | 4 | 3 | 2 | 1 | U.S. ARMY

NOTE:
COMPLETE STEEL RINGS MAY BE EITHER LAPPED OR WELDED AT ENDS. ALL BARS SHALL BE HOOKED TO RINGS.

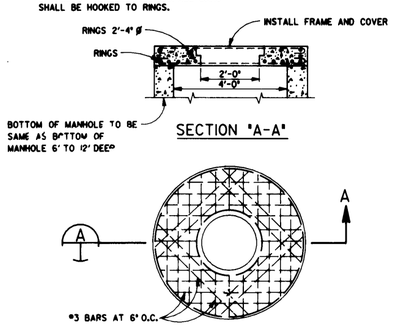


SHALLOW MANHOLE
LESS THAN 6 FT. DEEP
N.T.S.

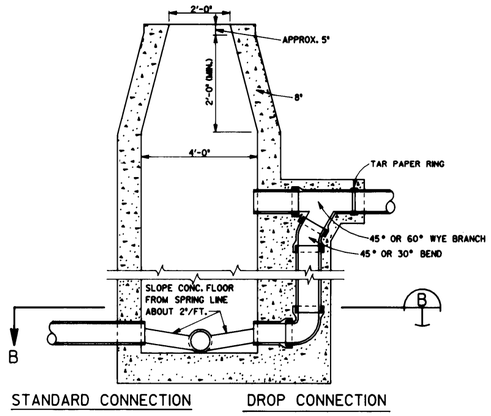


TYPICAL SECTION
MANHOLE 6 FT.-12 FT.DEEP
N.T.S.

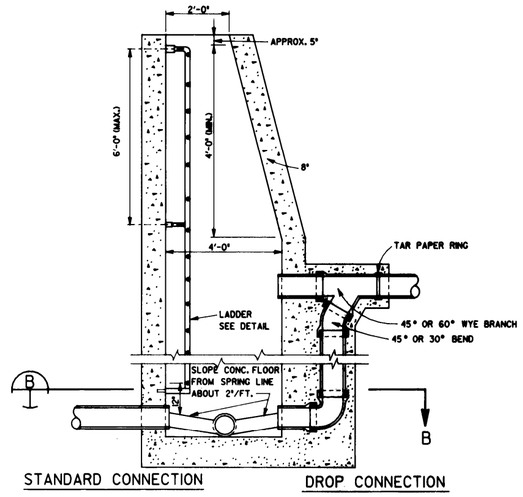


TYPICAL SECTION
N.T.S.
NOTE: ORIENT MANHOLE SO THAT LADDER WILL NOT TERMINATE DIRECTLY OVER PIPE.

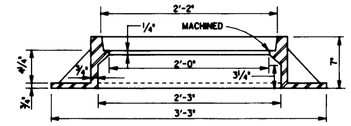


SECTION "C-C"

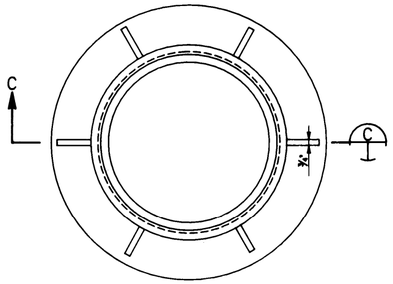


PLAN OF FRAME
N.T.S.
NOTE: SEE SPECIFICATIONS FOR MATERIALS OF CONSTRUCTION

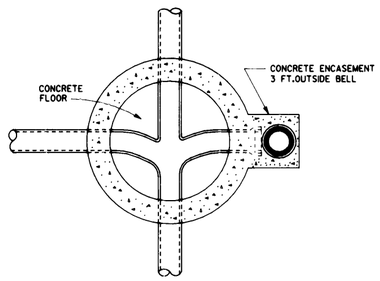


SECTION "B-B"

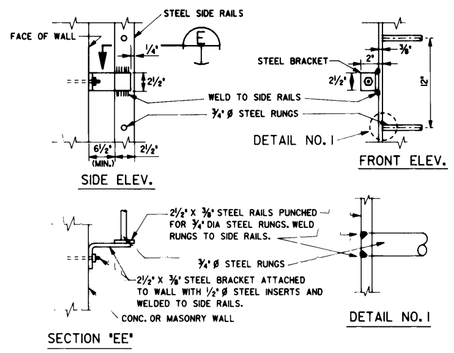


TYPICAL LADDER DETAIL
N.T.S.

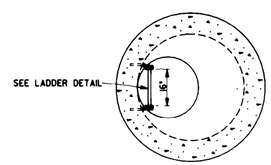


PLAN

STANDARD MANHOLE-OVER 12 FT.DEEP
N.T.S.

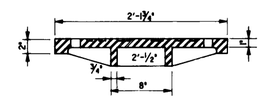


SECTION "D-D"

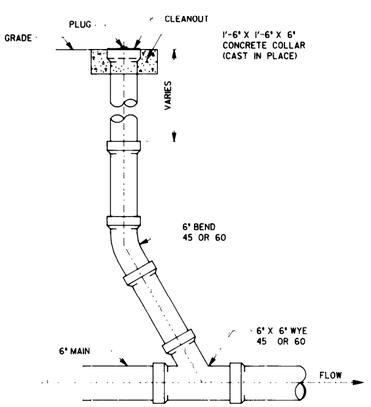


SEWER CLEANOUT
N.T.S.

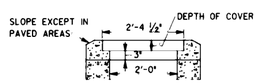


SECTION
FRAME FOR STANDARD M.H.

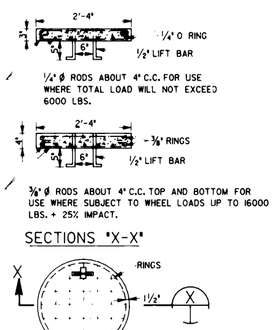


NOTE:
RE CONCRETE COVERS AND FRAMES.
USED CLASS A, 3750 PSI. CONCRETE.
STEEL HINGES MAY BE EITHER HOOKED LAPPED OR WELDED AT ENDS.
ALL BARS SHALL BE HOOKED TO RINGS.

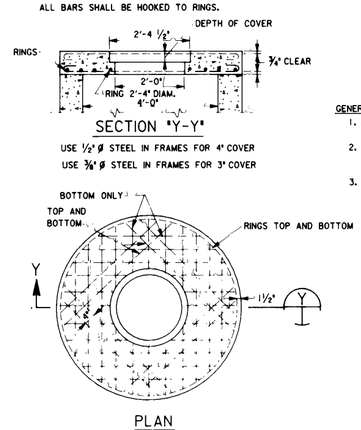


GENERAL NOTES:
1. WHERE MANHOLES ARE SUBJECT TO TRAFFICLOADS, CAST IRON OR 4 - INCH REINFORCED CONCRETE COVERS AS SHOWN SHALL BE USED UNLESS OTHERWISE INDICATED.
2. WHEREVER MANHOLES ARE NOT SUBJECT TO TRAFFIC LOADS, THE COVERS MAY BE 3 - INCH REINFORCE CONCRETE AS SHOWN OR CAST IRON WITHOUT THE RIBS, UNLESS OTHERWISE INDICATED.
3. COVER FRAMES SHALL BE SECURELY INSTALLED IN A BED OF CEMENT MORTAR.

CONCRETE COVERS AND COVER FRAMES
N.T.S.

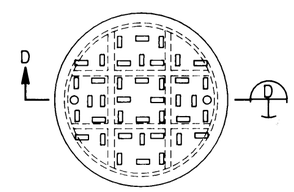


PLAN AND COVER
FRAMES AND COVERS
N.T.S.

| Symbol | Description | Date | Approved |
|---|---|---|---|
| | Revisions | | |

Prepared by:
Title: Civil Engineer
Reviewed by:
Title: Ch Envir Prot & Util Section
Recommended by:
Title: Ch Civil-Structures Branch
Approved by:
Title: Act Ch Engr Div Date:
Approved for Functional Adequacy by:
Title: Date:

US ARMY ENGINEER DIVISION HUNTSVILLE
CORPS OF ENGINEERS
HUNTSVILLE, ALABAMA

Site adapt A/E :
US Army Corps of Engineers

DETAILS AND SECTIONS
SANITARY SEWER
STANDARD MANHOLE
CIVIL

| Dwn. by : RB | Ckd. by : CDC | | |
|---|---|---|---|
| Reviewed by : J. T. AMMONS | Date : 29 OCT 85 | Sheet reference number : | Design file no.: STD 40-08-02 |
| Approved by : | Drawing code : | C- | Rev. 0 |
| | | | Sheet 1 of 1 |

5 | 4 | 3 | 2 | 1