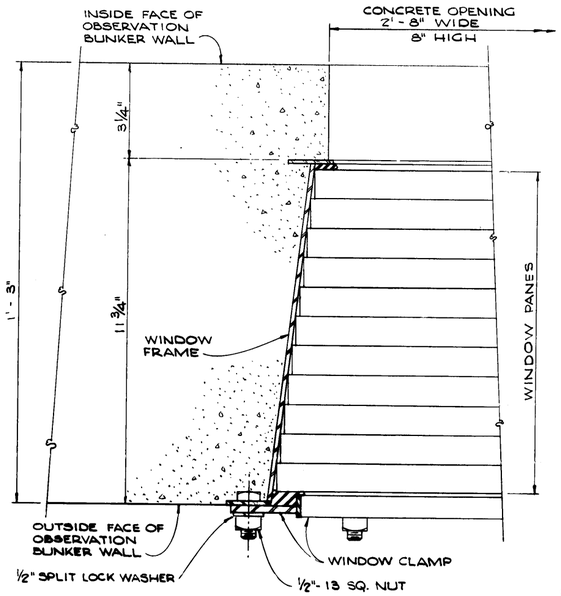

WINDOW ASSEMBLY
HALF SIZE

NOTE: WINDOW FRAMES SHALL BE INTERNALLY BRACED DURING CONCRETE PLACEMENT TO PREVENT DISTORTION.

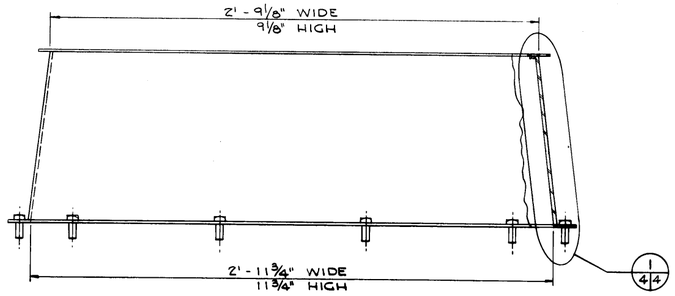

PLAN

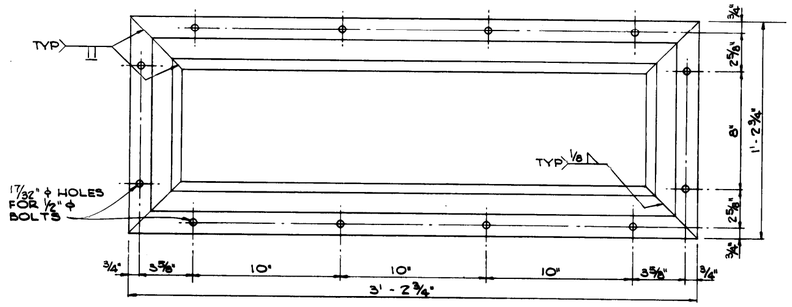

ELEVATION

WINDOW FRAME
SCALE 3" = 1'-0"

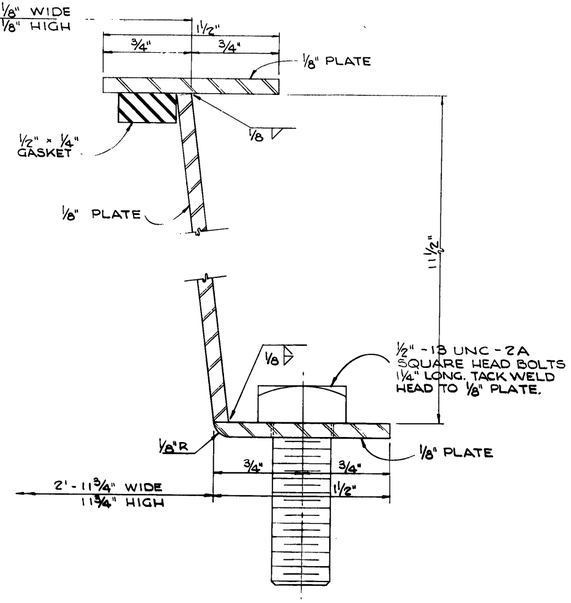

DETAIL 1/4.4
NO SCALE

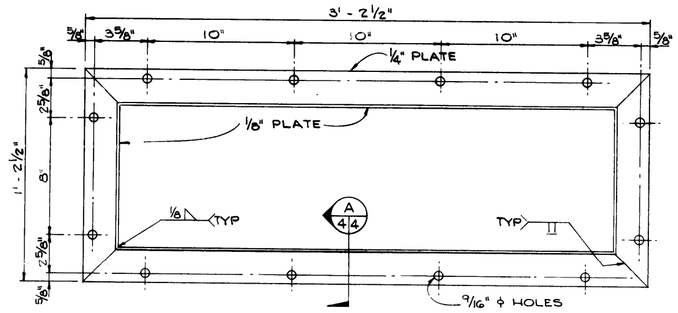

WINDOW CLAMP
SCALE 3" = 1'-0"

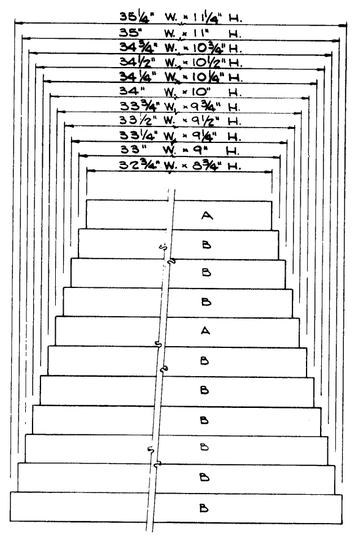

WINDOW PANES
HALF SIZE

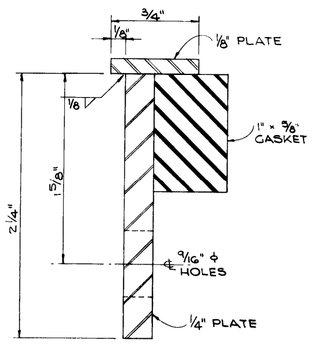

SECTION A/4.4
NO SCALE

"A" PLASTIC SHEET, TRANSPARENT, POLYCARBONATE.

"B" PLASTIC SHEET, TRANSPARENT, ACRYLIC.

THICKNESS OF PANES 1" ± 1/64"

TOLERANCE OF DIMENSIONS ± 1/32"

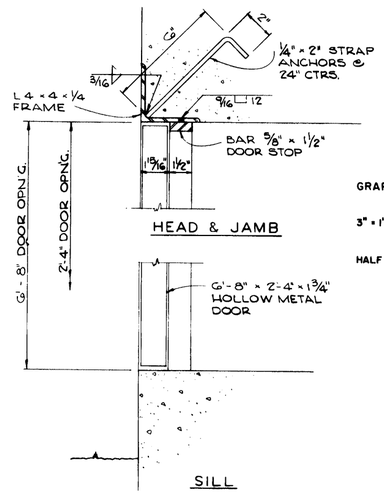

HEAD & JAMB

SILL

DOOR DETAILS
SCALE 3" = 1'-0"

GRAPHIC SCALES

3" = 1'-0" 0 3" 6" 9" 1'

HALF SIZE 0 1" 2" 3" 4" 5" 6"

SYMBOL	DESCRIPTION	DATE	APPROVAL

REVISIONS

BLACK & VEATCH
CONSULTING ENGINEERS
KANSAS CITY, MISSOURI

DEPARTMENT OF THE ARMY
OFFICE OF THE CHIEF OF ENGINEERS
MILITARY CONSTRUCTION — ENGINEERING DIVISION
WASHINGTON, D. C.

DRAWN BY: G I C
TRACED BY: G I C
CHECKED BY: J M P
SUBMITTED: L L Callahan
CHIEF, ADV. ENG. & DESIGN BRANCH
APPROVED: Wilson R. Foster
APPROVED: John W. Barker
CHIEF, ENGINEERING DIVISION, D. C. E.
DATE: 8 JAN 74
APPROVED FOR:
DATE:

BUNKER, OBSERVATION
ARTILLERY FIRE

WINDOW AND DOOR DETAILS

SCALE: AS NOTED
SPEC. NO. 60-04-17-73-CE
DRAWING NUMBER 60-04-17
SHEET 4 OF 4