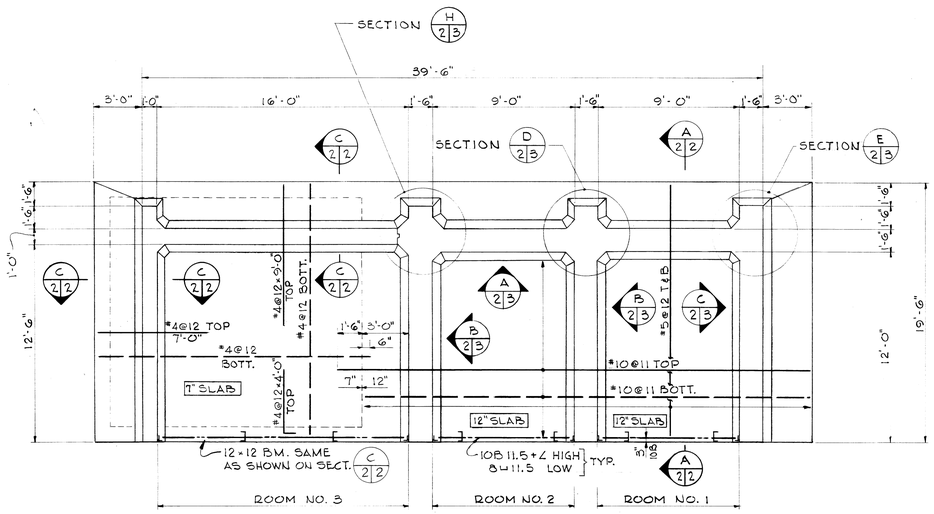

PLAN AT FLOOR LEVEL
SCALE: 1/4" = 1'-0"

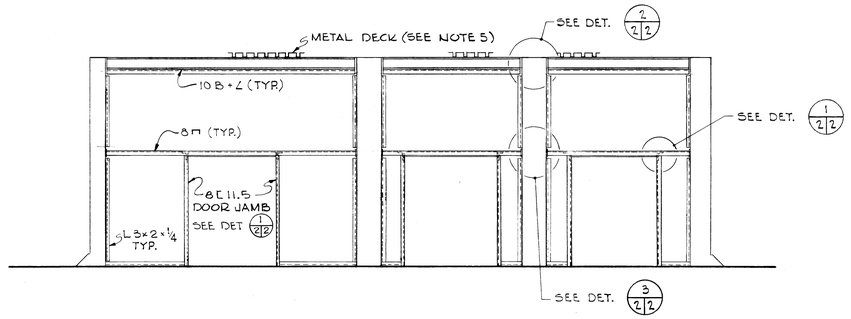

FRONT ELEVATION
SCALE: 1/4" = 1'-0"

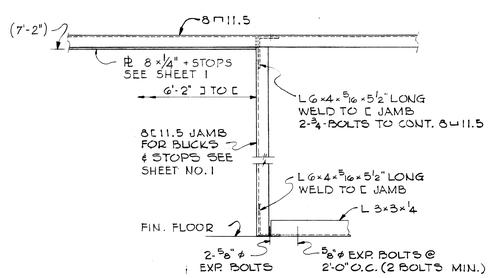

DETAIL 1 2|2
CHANNEL DOOR FRAME DETAIL (3 REQ'D)
SCALE: 1" = 1'-0"

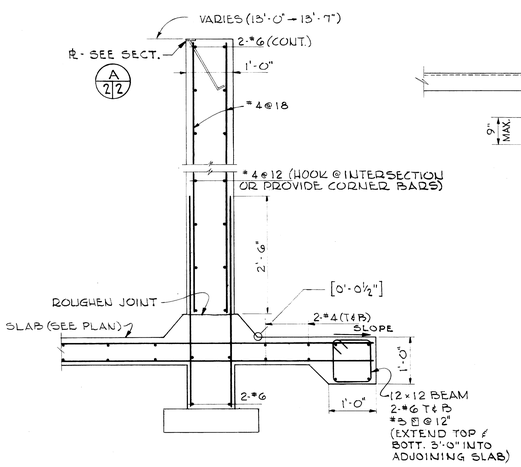

SECTION C
SCALE: 3/4" = 1'-0" 2|2

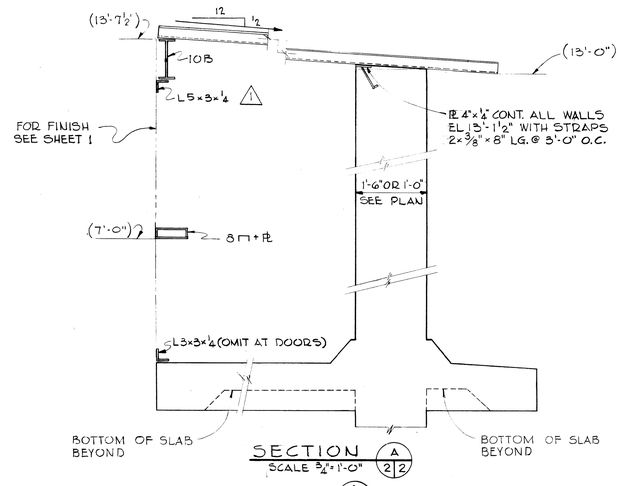

SECTION A 2|2
SCALE 3/4" = 1'-0"

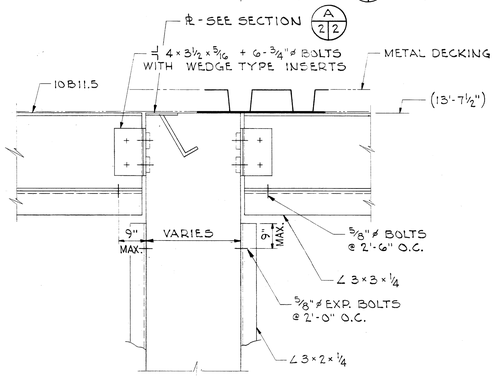

DETAIL 2 2|2
SCALE: 1 1/2" = 1'-0"

TYPICAL TOP BEAM CONNECTION - MAY BE REVISED AT CONTRACTOR'S OPTION

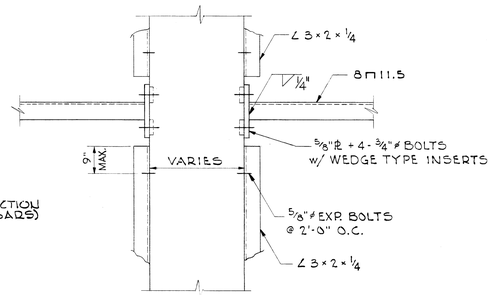

DETAIL 3 2|2
SCALE: 1 1/2" = 1'-0"

LOADING SCHEDULE			
	20 PSF	30 PSF	40 PSF
LIVE LOAD	20	30	40
ROOFING	6	6	6
INSUL	2	2	2
TOTAL	28	38	48

NOTES:

1. MINIMUM SOIL BEARING CAPACITY SHALL BE 3,000 PSF.
2. ALL HOOKS AND BENDS SHALL CONFORM TO RECOMMENDED BENDS IN ACI 315-65 UNLESS OTHERWISE NOTED.
3. NO SPLICES PERMITTED IN REINFORCING STEEL UNLESS SPECIFICALLY SHOWN ON PLANS AND DETAILS.
4. MAXIMUM EXPLOSIVE CAPACITY OF STRUCTURE, BASED ON INCIPIENT FAILURE CONDITIONS. IS 200 LBS. OF HIGH EXPLOSIVE AT THE CENTER OF ROOMS 1 & 2, 4'-0" FROM REAR WALL.
5. METAL DECK SHALL BE LONG-SPAN UNITS HAVING FLAT-PLATE BOTTOM SURFACE; $I = 2.12\ in^4$, $S = 0.91\ in^3$
6. FOR SPECIAL CONSTRUCTION REQUIREMENTS FOR ROOMS 1 & 2 SEE NOTES ON SHEET 3.
7. NOTATION THUS (7'-2") DENOTES HEIGHT ABOVE FINISHED INTERIOR FLOOR
8. FOR CONCRETE STRENGTHS SEE POURING SEQUENCE, SHEET 3
9. △1 CONTRACTOR MAY SUBSTITUTE 8"×8"×1/4" TUBE SECTION, AT HIS OPTION, FOR 8□11.5 GIRT
10. △2 CONSTRUCTION JOINTS MUST BE LOCATED WHERE SHOWN ON DRAWINGS.

GRAPHIC SCALES
1/4" = 1'-0"
3/4" = 1'-0"
1" = 1'-0"

SYMBOL	DESCRIPTION	DATE	APPROVAL
△2	ADDED NOTE 10.	22 AUG 68	
△1	ADDED NOTE 9 & REVISED LINTEL ANGLE	8/22/66	

REVISIONS

AMMANN & WHITNEY
CONSULTING ENGINEERS
111-8TH AVENUE, NEW YORK, N.Y.

DEPARTMENT OF THE ARMY
OFFICE OF THE CHIEF OF ENGINEERS
MILITARY CONSTRUCTION - ENGINEERING DIVISION
WASHINGTON, D.C.

DRAWN BY: M.A.R.
TRACED BY: M.A.R.
CHECKED BY:
SUBMITTED BY: AMMANN & WHITNEY

VACUUM COLLECTOR BUILDING

PLAN, ELEVATIONS & SECTIONS

STRUCTURAL

APPROVED: CHIEF M. & P.S. BRANCH
APPROVED: CHIEF ENGINEERING DIVISION, MIL. CONSTR. O.C.E.
DATE: 18 JULY 1966
APPROVED FOR
DATE:
SCALE AS NOTED
SPEC. NO.
DRAWING NUMBER 60-14-05
SHEET 2 OF 7

THIS DRAWING SUPERSEDES 60-14-03