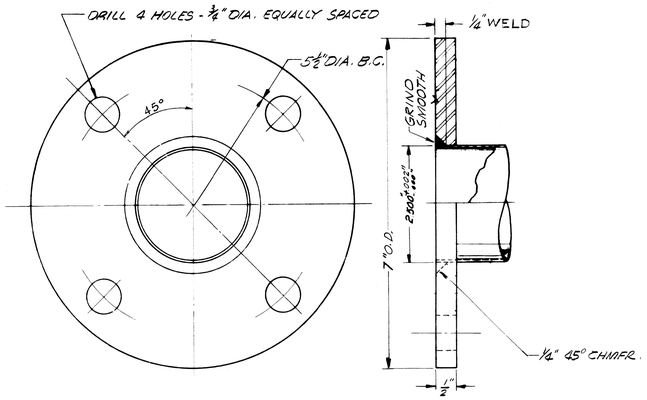

DETAIL 1/5|6
SCALE: 3/4" = 1"

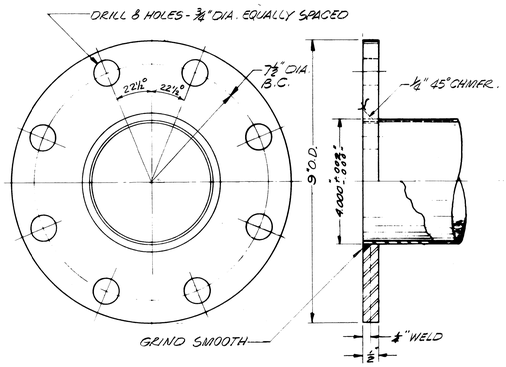

DETAIL 2/5|6
SCALE: 1/2" = 1"

NOTE:
FACE FLANGES AFTER WELDING.

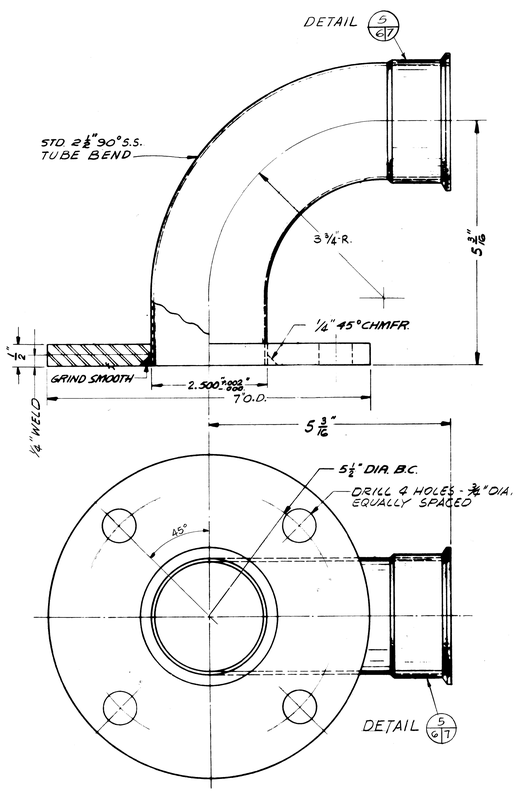

DETAIL 3/5|6
SCALE: 3/4" = 1"

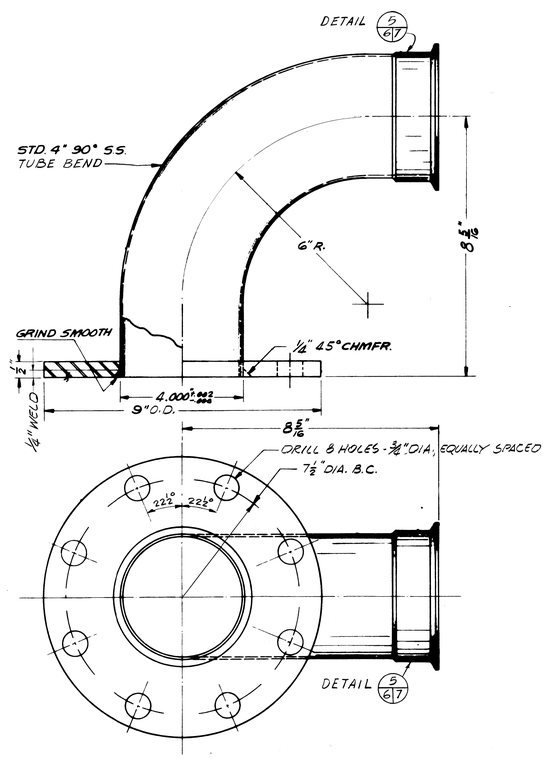

DETAIL 4/5|6
SCALE: 1/2" = 1"

GRAPHIC SCALES

1/2" = 1" 1" 0 1" 2" 3"

3/4" = 1" 1" 0 1" 2" 3"

ADAPTED FROM WFSOD No. 1028-M2-1

TOLERANCE & DIMENSIONS EXCEPT AS NOTED

FROM FINISHED SURFACES
DECIMAL ± .002"
FRACTIONAL ± 1/64"
ANGULAR ± 30'

FROM UNFINISHED SURFACES
FRACTIONAL ± 1/32"
ANGULAR ± 1°

SHARP CORNERS & EDGES BROKEN TO APPROX. 1/32 IN.

SYMBOL	DESCRIPTION	DATE	APPROVAL

REVISIONS

AMMANN & WHITNEY
CONSULTING ENGINEERS
111-8TH AVENUE, NEW YORK, N.Y.

DEPARTMENT OF THE ARMY
OFFICE OF THE CHIEF OF ENGINEERS
MILITARY CONSTRUCTION - ENGINEERING DIVISION
WASHINGTON, D.C.

DRAWN BY: G.S.
TRACED BY: G.S.
CHECKED BY: M.S.A.
SUBMITTED BY: E. Cohen
AMMANN & WHITNEY
APPROVED: [illegible]
CHIEF M. & P.S. BRANCH
APPROVED: [illegible]
CHIEF ENGINEERING DIVISION, MIL. CONSTR. O.C.E.
DATE: 18 JULY 1966

VACUUM COLLECTOR BUILDING

VACUUM COLLECTOR SYSTEM PIPING DETAILS

MECHANICAL

APPROVED FOR

DATE:

SCALE: AS NOTED
SPEC. NO.
DRAWING NUMBER 60-14-05
SHEET 6 OF 7

THIS DRAWING SUPERSEDES 60-14-03