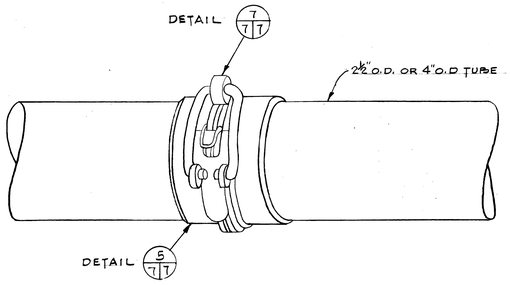

DETAIL 6/5 7
NOT TO SCALE

SNAP - ACTION CLAMP ASSEMBLY
(TYPICAL)

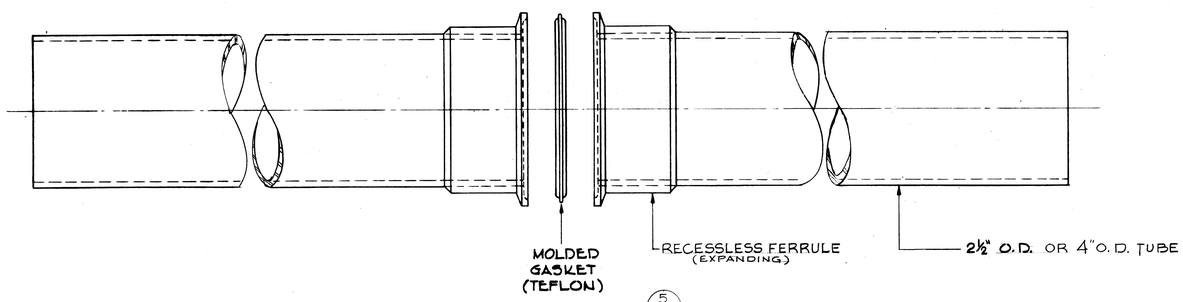

DETAIL 5/6 7/7
NOT TO SCALE

JOINT ASSEMBLY

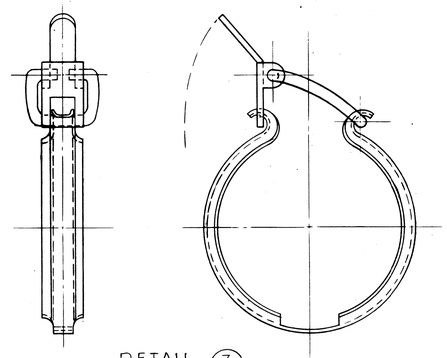

DETAIL 7/7
NOT TO SCALE

SNAP-ACTION CLAMP

ADAPTED FROM WFSOD No. 1028-M2-2

SYMBOL	DESCRIPTION	DATE	APPROVAL

REVISIONS

AMMANN & WHITNEY
CONSULTING ENGINEERS
111-8TH AVENUE, NEW YORK, N.Y.

DEPARTMENT OF THE ARMY
OFFICE OF THE CHIEF OF ENGINEERS
MILITARY CONSTRUCTION - ENGINEERING DIVISION
WASHINGTON, D.C.

DRAWN BY: G.S.
TRACED BY: G.S.
CHECKED BY: M.S.A.
SUBMITTED BY AMMANN & WHITNEY
APPROVED: CHIEF M. & P.S. BRANCH
APPROVED: CHIEF ENGINEERING DIVISION, MIL. CONSTR. O.C.E.
DATE: 18 JULY 1966

VACUUM COLLECTOR BUILDING

VACUUM COLLECTOR SYSTEM TUBING COUPLINGS

MECHANICAL

TOLERANCE & DIMENSIONS EXCEPT AS NOTED
FROM FINISHED SURFACES
DECIMAL ±
FRACTIONAL ±
ANGULAR ±
FROM UNFINISHED SURFACES
FRACTIONAL ±
ANGULAR ±
SHARP CORNERS & EDGES BROKEN TO APPROX. ___ IN.

APPROVED FOR
DATE:

SCALE AS NOTED
SPEC. NO.
DRAWING NUMBER 60-14-05
SHEET 7 OF 7

THIS DRAWING SUPERSEDES 60-14-03