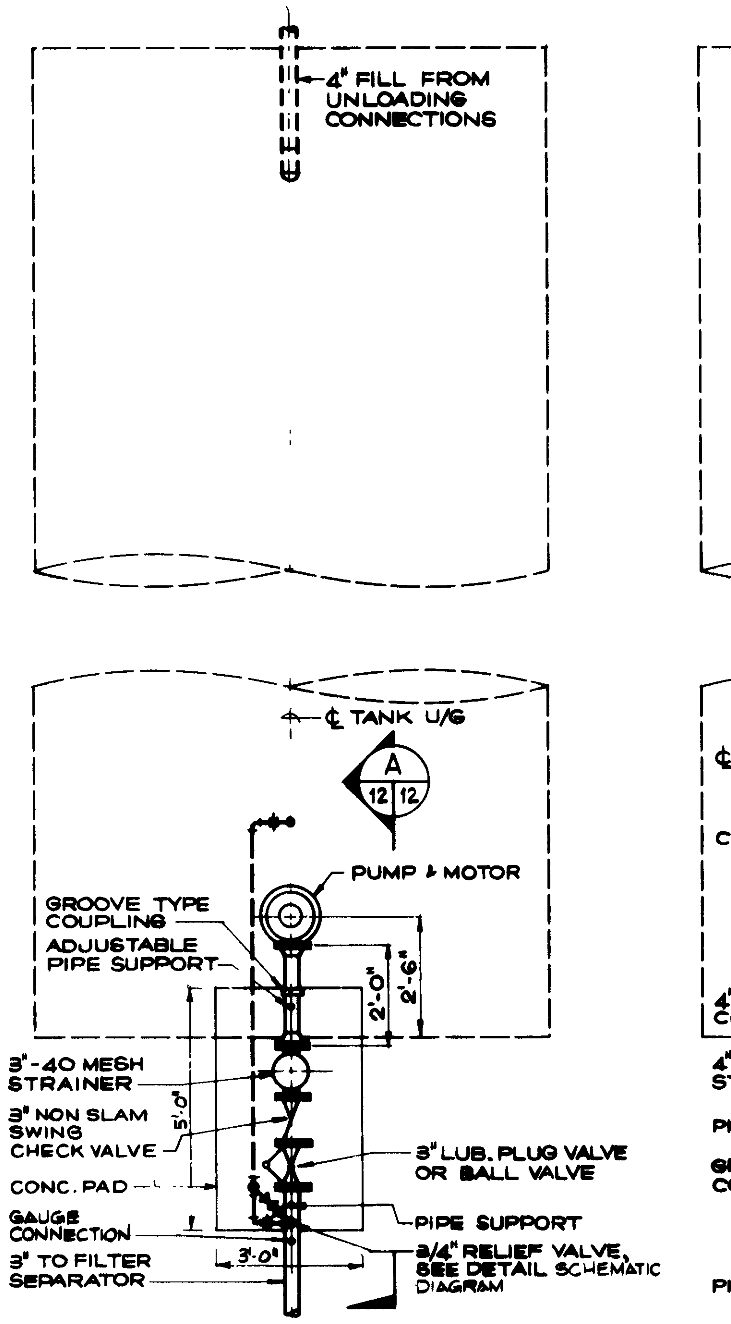

ALTERNATE I
TYPICAL DEEP WELL VERTICAL TURBINE PUMP

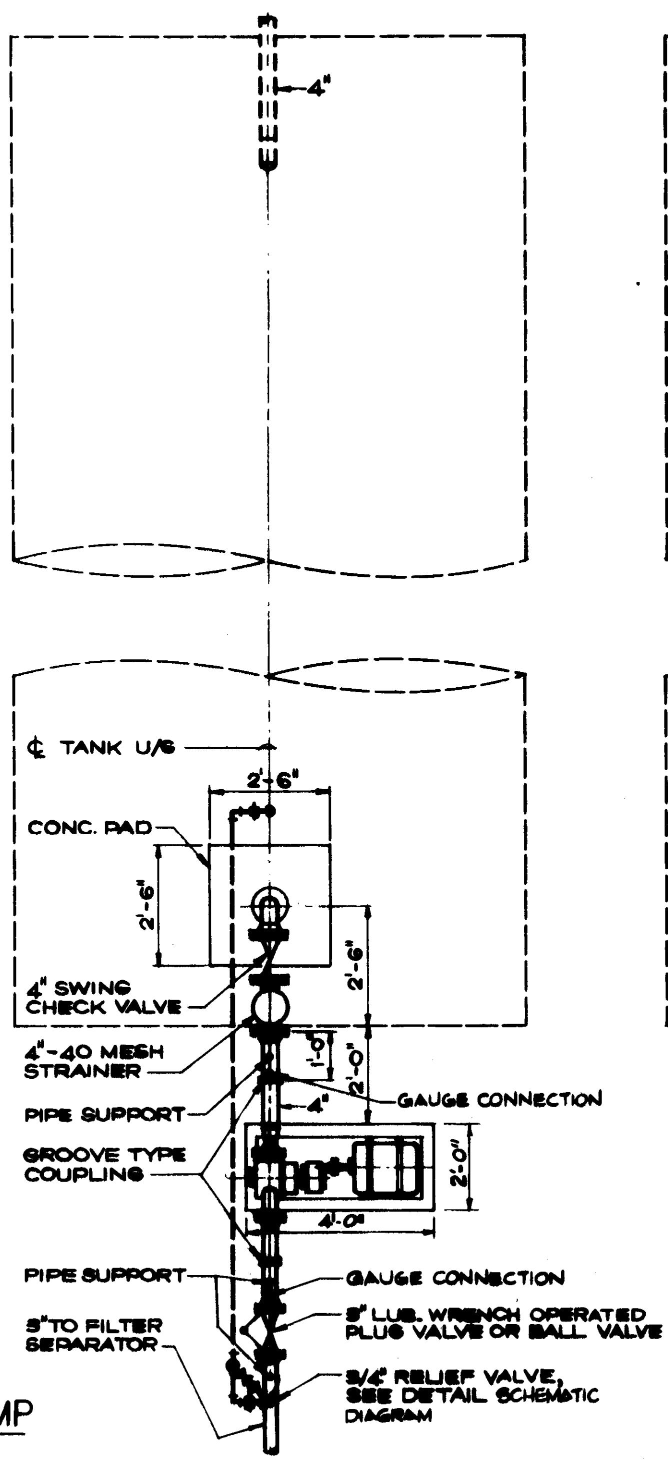

ALTERNATE II
TYPICAL POSITIVE DISPLACEMENT PUMP

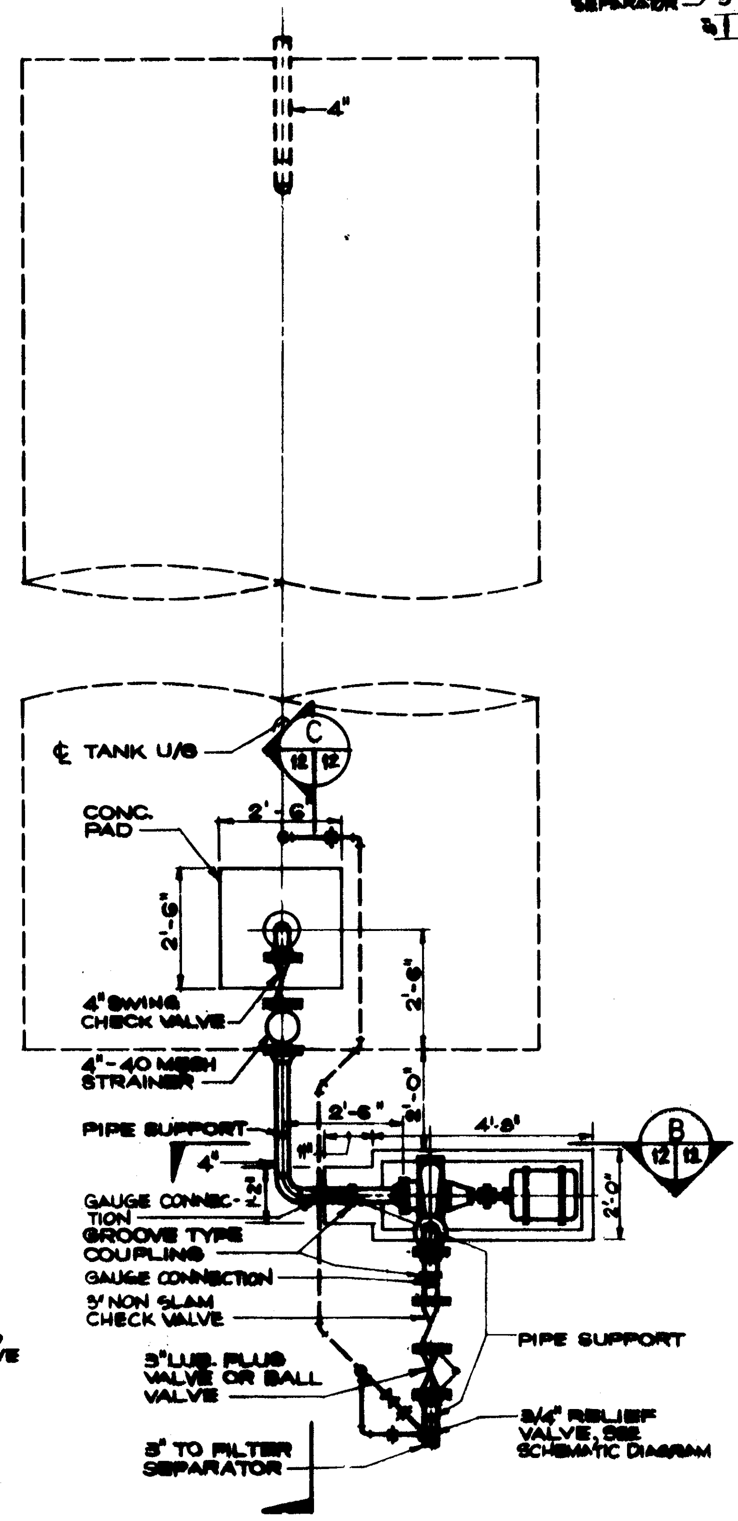

ALTERNATE III
TYPICAL SELF PRIMING CENTRIFUGAL PUMP

TYPICAL PUMP INSTALLATIONS FOR BURIED TANKS
SCALE: 1/2" = 1'-0"

NOTES:
1. ALTERNATE I IS APPLICABLE TO ALL TANK INSTALLATIONS.
2. ALTERNATES II & III ARE LIMITED BY PUMP NPSH REQUIREMENTS AND ALTITUDE OF INSTALLATION MUST BE CONSIDERED. THESE ALTERNATES ARE NOT RECOMMENDED FOR TANKS OVER 8 FT. IN DIAMETER.

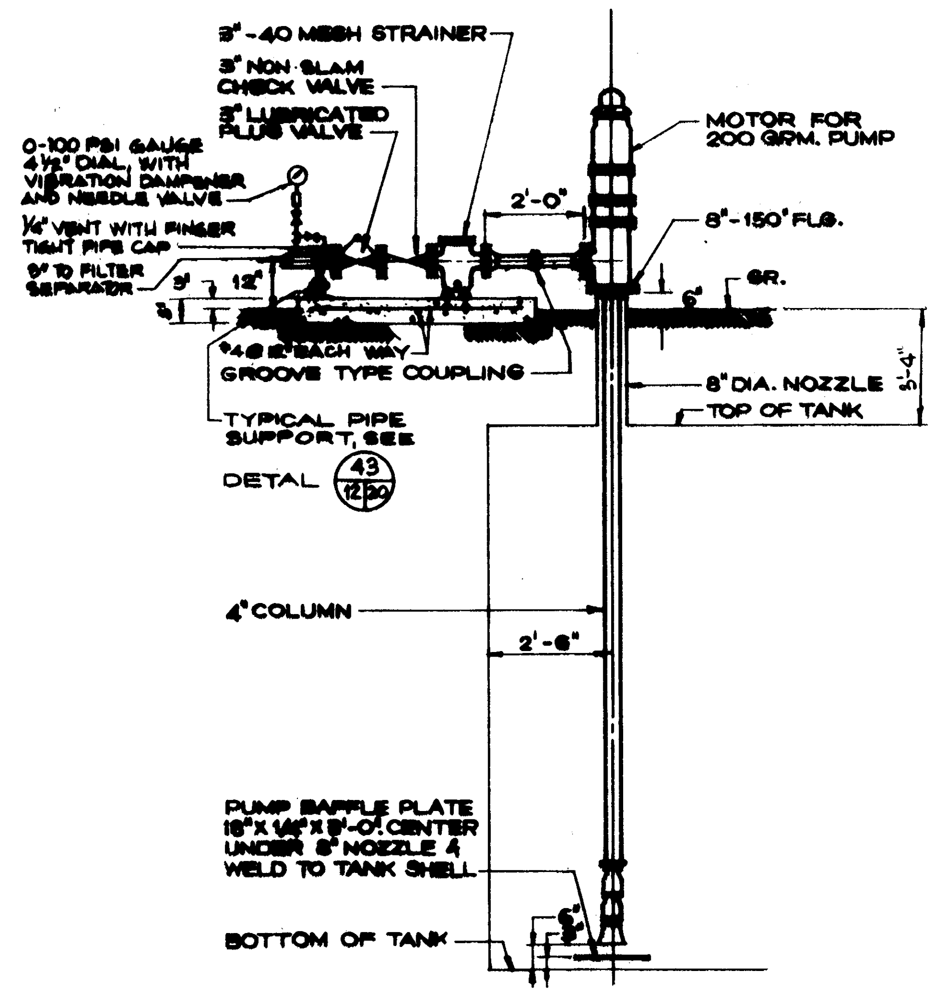

SECTION A
SCALE: 1/2" = 1'-0" 12 12

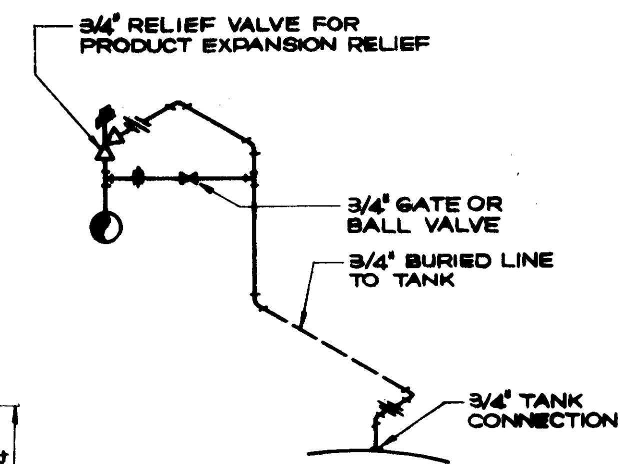

RELIEF VALVE BY-PASS SCHEMATIC DIAGRAM
NOT TO SCALE

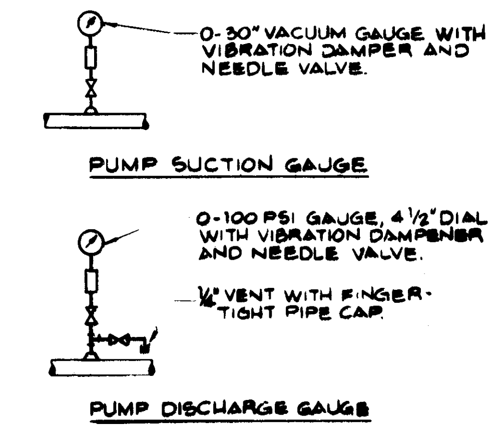

TYPICAL PUMP GAUGES DETAIL 16 12 12
NOT TO SCALE

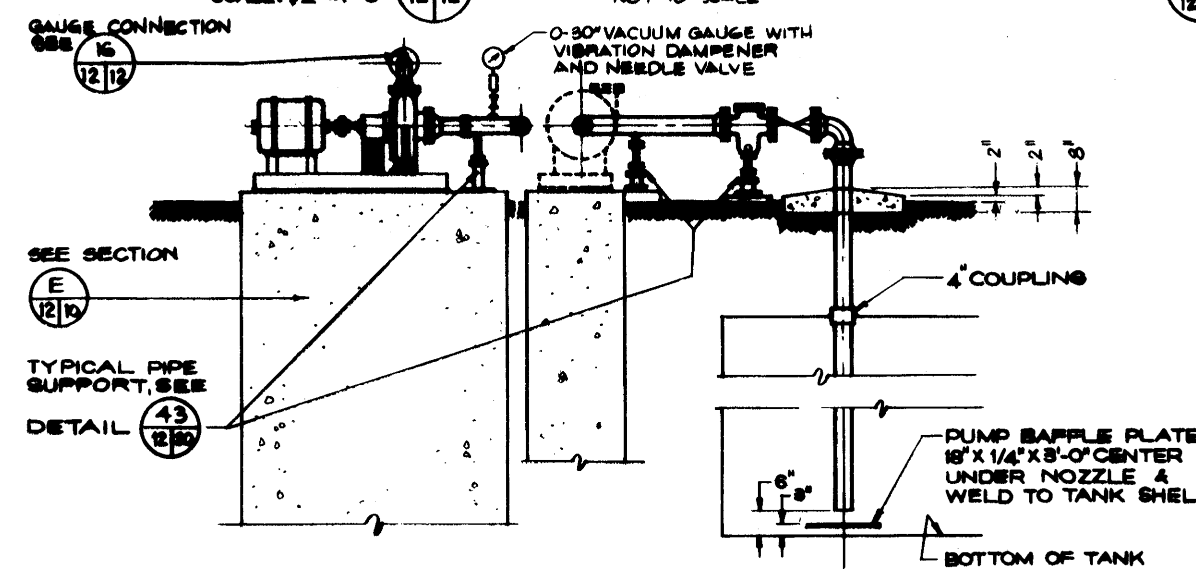

SECTION B
SCALE: 1/2" = 1'-0" 12 12

SECTION C
SCALE: 1/2" = 1'-0" 12 12

NOTE: NOMINAL PUMP RATING IS 200 GPM AT 156 FOOT HEAD. PUMP HEAD AND DRIVE MOTOR HORSEPOWER TO BE REVISED FOR EACH SITE APPLICATION.

GRAPHIC SCALE 1/2" = 1'-0"

SYMBOL		REVISIONS	DATE	APPROVED

US ARMY ENGINEER DIVISION HUNTSVILLE
CORPS OF ENGINEERS
HUNTSVILLE, ALABAMA

STANDARD AIRCRAFT FUELING SYSTEM FOR ARMY AVIATION

UNDERGROUND STEEL TANKS
PUMPING FACILITIES

SHEET REF. NO.

DWN. BY CPE | CKD. BY TMR | FILE NO. | SIZE F | DWG. NO. 78-24-20 | REV. | SPEC. NO. | DATE | SHEET 12 OF 25