CORPS OF ENGINEERS

U. S. ARMY

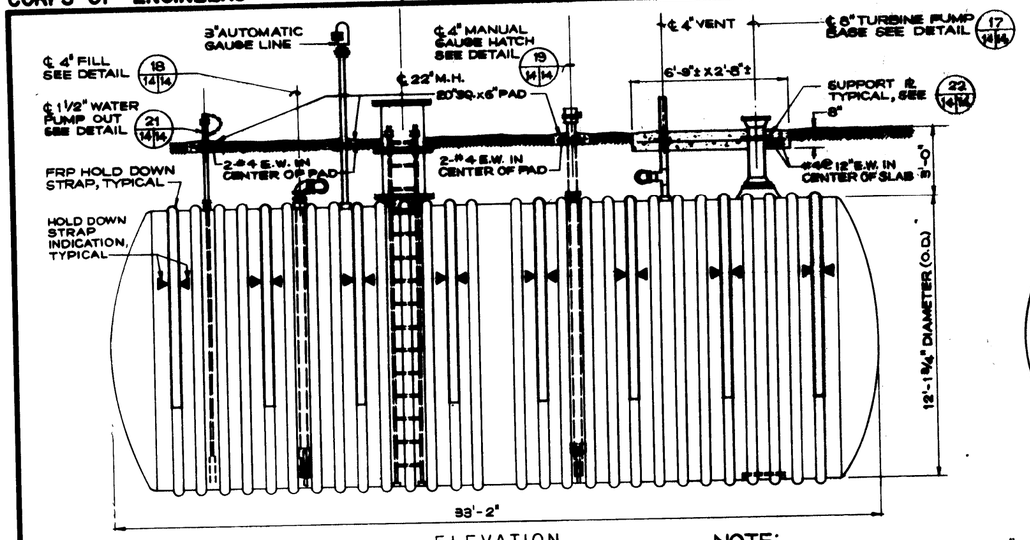

ELEVATION
25,000 GALLON FRP TANK
SCALE: 3/8" = 1'-0"

NOTE:
FOR GENERAL DETAILS OF TANK INTERNAL FITTINGS, SEE DETAILS OF 25,000 GALLON TANKS.

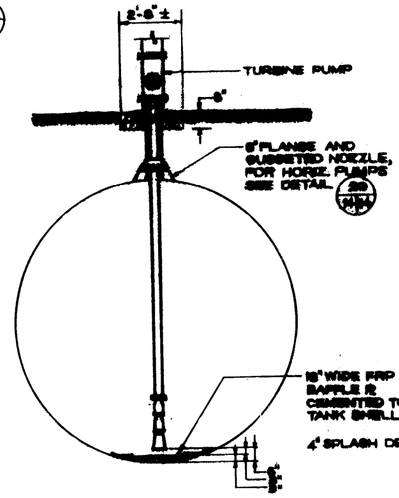

8" NOZZLE FOR VERTICAL TURBINE PUMP-DETAIL 17/14/14
SCALE: 3/8" = 1'-0"

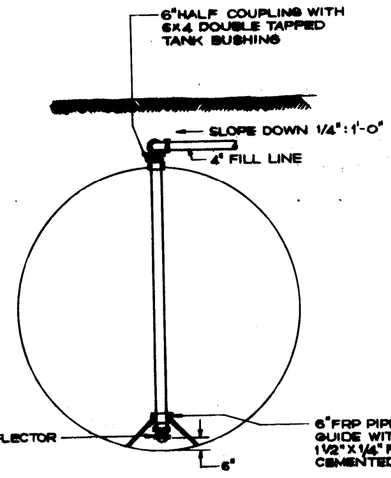

4" FILL STEM - DETAIL 18/14/14
SCALE: 3/8" = 1'-0"

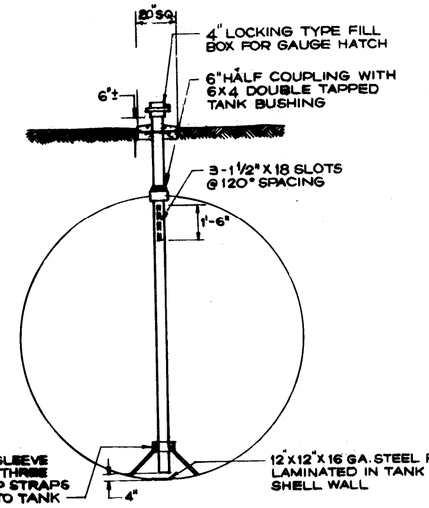

GAUGE HATCH STEM - DETAIL 19/14/14
SCALE: 3/8" = 1'-0"

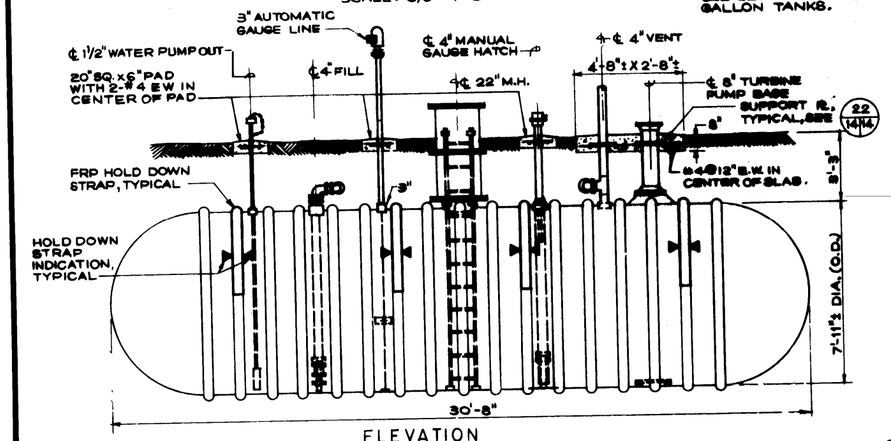

ELEVATION
10,000 GALLON FRP TANK
SCALE: 3/8" = 1'-0"

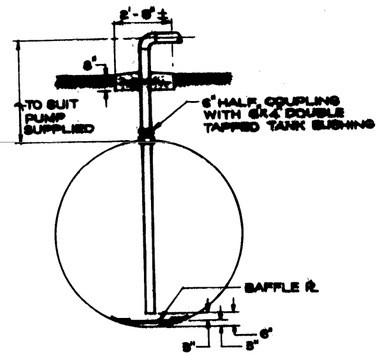

HORIZONTAL PUMP SUCTION NOZZLE-DETAIL 20/14/14
SCALE: 3/8" = 1'-0"

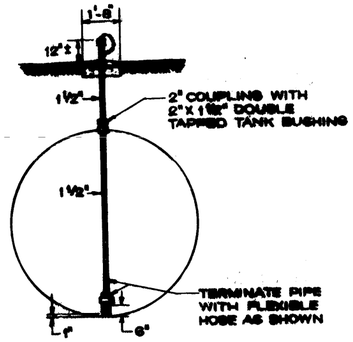

WATER PUMP OUT-DETAIL 21/14/14
SCALE: 3/8" = 1'-0"

GENERAL NOTES:

1 — ALL FRP TANKS TO BE PROVIDED WITH CONCRETE HOLD DOWN PADS AND INSTALLED IN ACCORDANCE WITH TANK MANUFACTURER'S INSTRUCTIONS. FOR FUEL TANK HOLD DOWN PAD DETAILS, SEE SHEET 15.

2 — ALL FUEL TANKS TO BE PROVIDED WITH MANHOLES AND INTERNAL TANK LADDER INSTALLED BY THE TANK MANUFACTURER. MANHOLE EXTENSION PIECES TO BE FRP AND FURNISHED BY THE TANK MANUFACTURER.

3 — WHEN TANK MANUFACTURER SUPPLIES 4" MINIMUM SIZE TANK OPENING AS STANDARD, USE BUSHINGS FOR REQUIRED CONNECTIONS.

4 — TANK CONNECTION AND MANHOLE LOCATIONS MAY VARY TO SUIT STANDARD TANKS.

5. BEND OR CUT REINF. BARS AT OPENINGS AND INTERFERENCES.

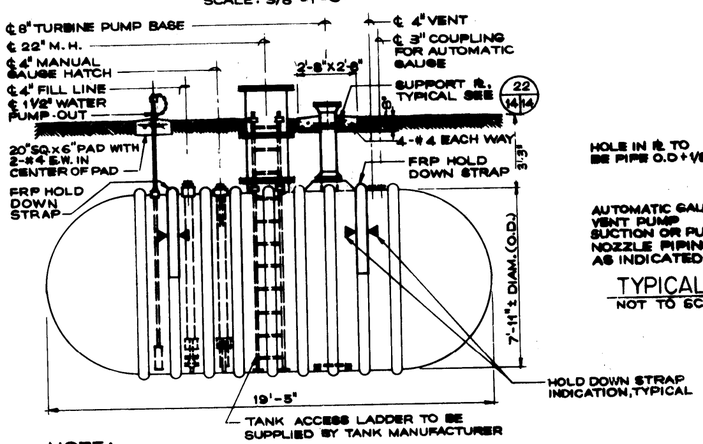

NOTE:
FOR GENERAL DETAILS OF TANK INTERNAL FITTINGS, SEE DETAILS OF 25,000 GALLON TANK. SOME TANKS HAVE 3 HOLD DOWN STRAPS, RELOCATE MANHOLE AND FITTINGS AS REQUIRED.

ELEVATION
6,000 GALLON FRP TANK
SCALE: 3/8" = 1'-0"

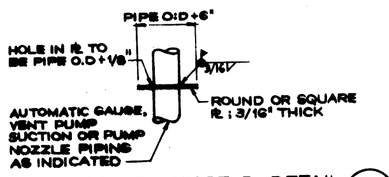

TYPICAL SUPPORT ℞-DETAIL 22/14/14
NOT TO SCALE:
15

NOTE:
TANK OPENINGS: FOUR 4" COUPLINGS. PROVIDE DOUBLE TAPPED TANK BUSHINGS AS REQUIRED FOR INTERNAL PIPING. 3" GAUGE HATCH TO BE SIMILAR TO DETAIL SHOWN FOR 4" GAUGE HATCH ON 25,000 GALLON TANK

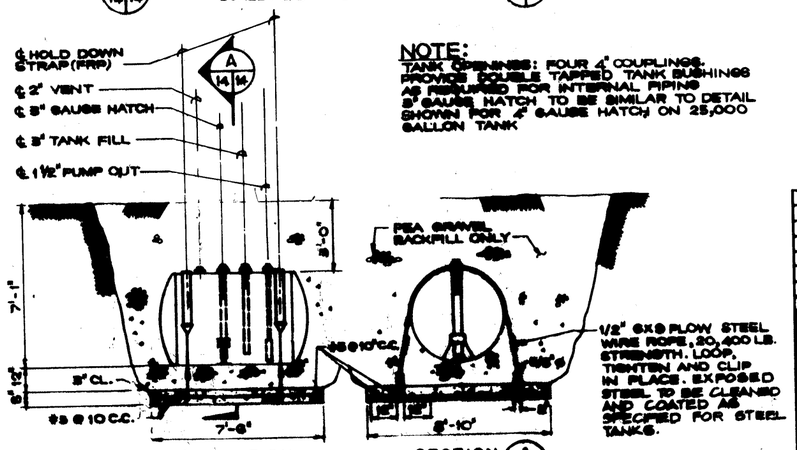

ELEVATION — SECTION A 14/14

550 GALLON FRP COLLECTION TANK
SCALE: 3/8" = 1'-0"

SYM.		REVISIONS		DATE APPROVED

KELLER & GANNON
ENGINEERS · ARCHITECTS · CONSULTANTS
200 SPEAR STREET, SAN FRANCISCO 94105

US ARMY ENGINEER DIVISION HUNTSVILLE
CORPS OF ENGINEERS
HUNTSVILLE, ALABAMA

STANDARD AIRCRAFT FUELING SYSTEM FOR ARMY AVIATION

UNDERGROUND FRP TANKS DETAILS

SHEET REF. NO.

FILE NO. | SIZE F | DWG. NO. 78-24-20 | REV.

DWN. BY CPB | CHKD. BY TMR | SPEC. NO. | DATE 1/20/83 | SHEET 14 OF 25

SCOTT GRAPHICS