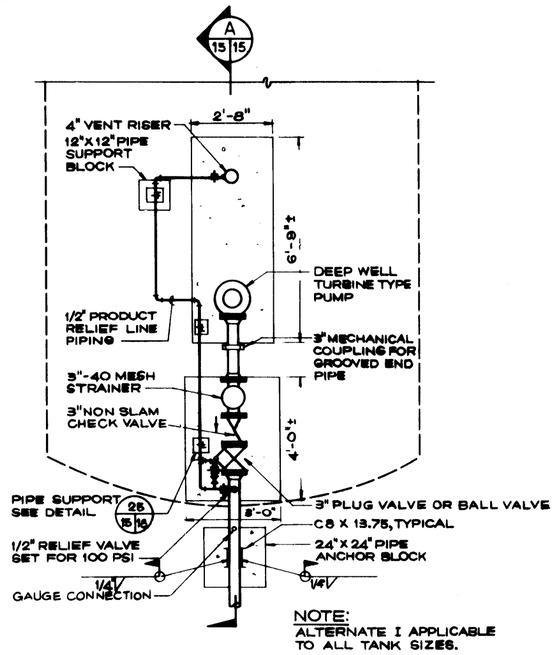

NOTE:
ALTERNATE I APPLICABLE TO ALL TANK SIZES.

PLAN
ALTERNATE I
TYPICAL DEEP WELL VERTICAL TURBINE PUMP
SCALE: 1/2" = 1'-0"

NOTES:
1. ALTERNATE I IS APPLICABLE TO ALL TANK INSTALLATIONS.
2. ALTERNATES II & III ARE LIMITED BY PUMP NPSH REQUIREMENTS AND ALTITUDE OF INSTALLATION MUST BE CONSIDERED. THESE ALTERNATES ARE NOT RECOMMENDED FOR TANKS OVER 8 FT. IN DIAMETER

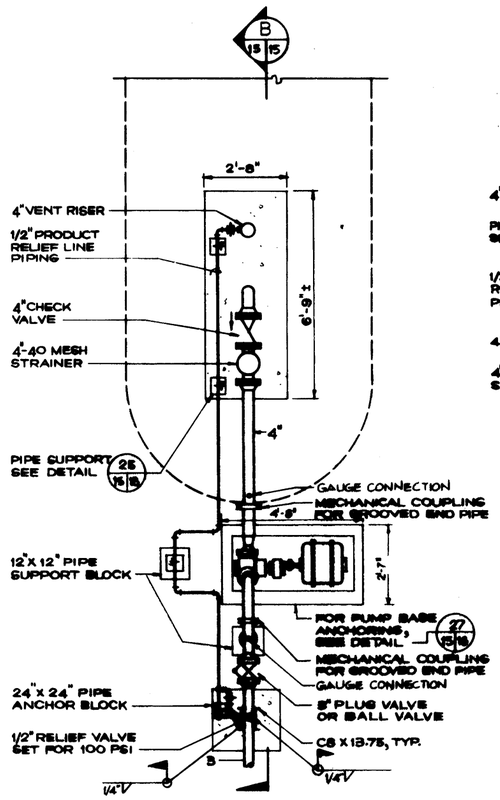

PLAN
ALTERNATE II
TYPICAL POSITIVE DISPLACEMENT PUMP
SCALE: 1/2" = 1'-0"

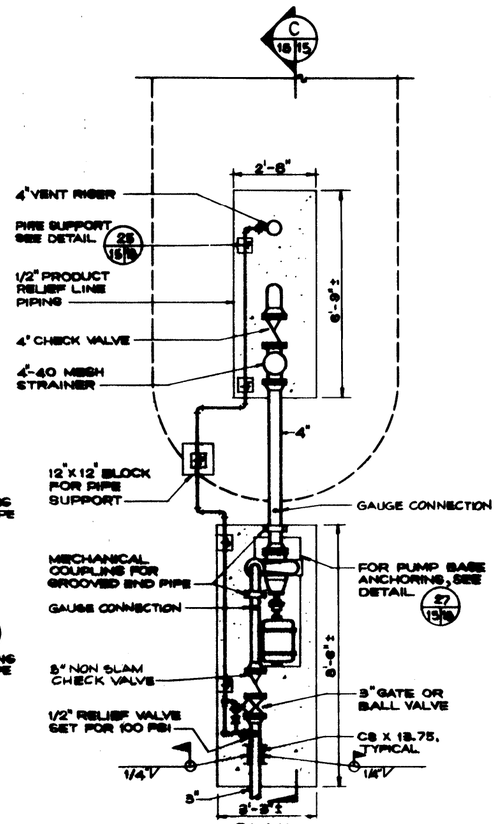

PLAN
ALTERNATE III
TYPICAL SELF PRIMING CENTRIFUGAL PUMP
SCALE: 1/2" = 1'-0"

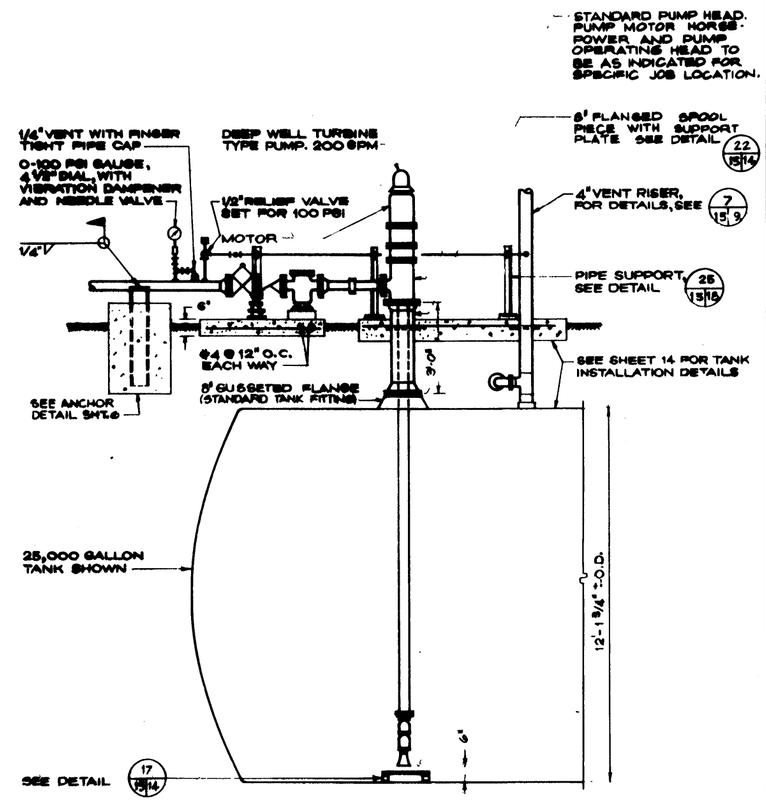

SECTION A 15/15
SCALE: 1/2" = 1'-0"

NOTE: NOMINAL PUMP RATING IS 200 GPM AT 156 FOOT HEAD. PUMP HEAD AND DRIVE MOTOR HORSEPOWER TO BE REVISED FOR EACH SITE APPLICATION.

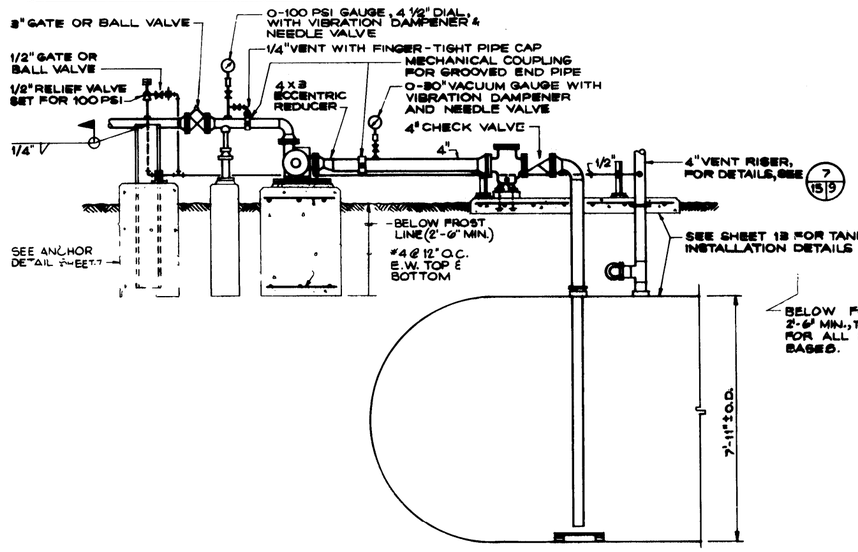

SECTION B 15/15
SCALE: 1/2" = 1'-0"

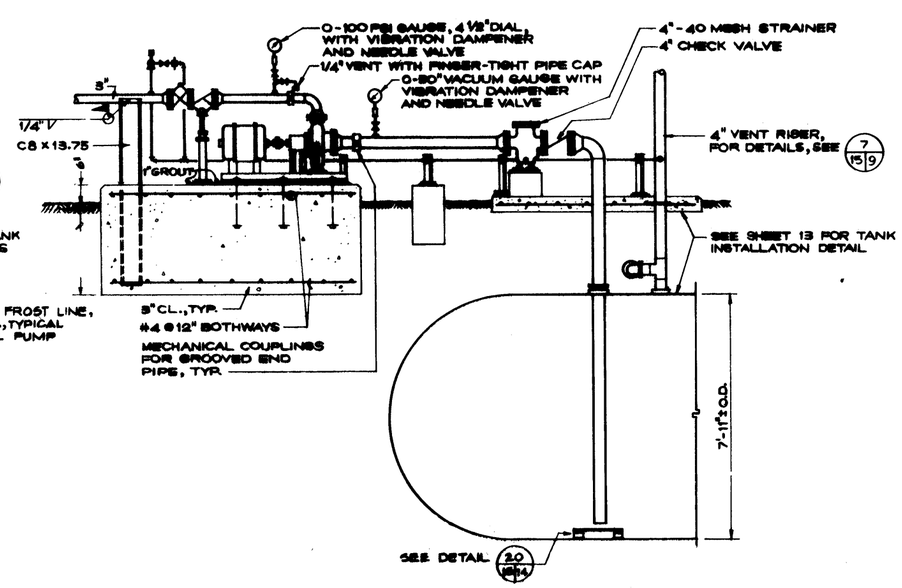

SECTION C 15/15
SCALE: 1/2" = 1'-0"

GRAPHIC SCALE 1/2" = 1'-0"

SYM.	ZONE		DATE	APPROVED
		REVISIONS		

KELLER & GANNON
ENGINEERS • ARCHITECTS • CONSULTANTS
300 BROADWAY STREET, SAN FRANCISCO 94133

US ARMY ENGINEER DIVISION HUNTSVILLE
CORPS OF ENGINEERS
HUNTSVILLE, ALABAMA

STANDARD AIRCRAFT FUELING SYSTEM FOR ARMY AVIATION

UNDERGROUND FRP TANKS
PUMPING FACILITIES

SHEET REF. NO.

DESIGN BY CPE | CHKD. BY TMR

FILE NO. | SIZE F | DWG. NO. 78-24-20 | REV.
SPEC. NO. | DATE 5/15/73 | SHEET 15 OF 25