CORPS OF ENGINEERS | U. S. ARMY

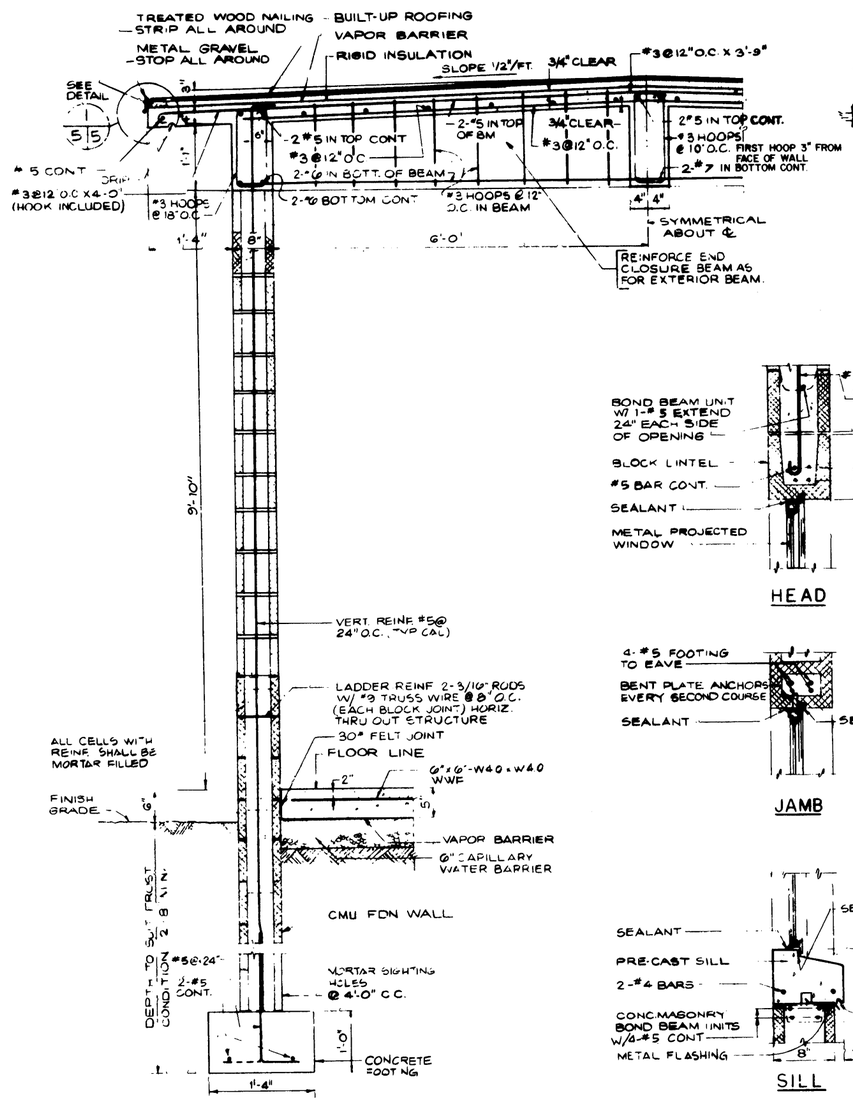

TYPICAL WALL SECTION (A / 4/5)
SCALE: 1"=1'-0"

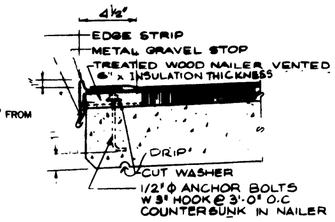

DETAIL (1 / 5/5)
SCALE: 3"=1'-0"

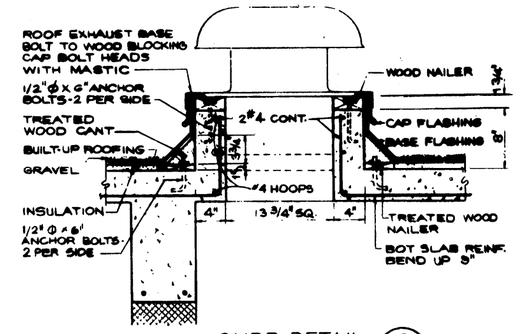

CURB DETAIL (2 / 4/5)
SCALE: 1 1/2"=1'-0"

GENERAL NOTES

1. FOOTINGS HAVE BEEN DESIGNED FOR A SOIL PRESSURE OF 1500 POUNDS PER SQUARE FOOT ALL FOOTINGS SHALL BE PLACED A MINIMUM OF 1'-6" INTO UNDISTURBED SOIL
2. STEP FOOTINGS WHERE ELEVATION CHANGES ONE VERTICAL TO TWO HORIZONTAL MAXIMUM STEP HEIGHT = 18 INCHES.
3. DESIGN LIVE LOADS –
   ROOF – 40 POUNDS PER SQUARE FOOT SNOW LOAD
   GROUND FLOOR – 200 POUNDS PER SQUARE FOOT WHICH INCLUDES EQUIPMENT WEIGHT
   WIND PRESSURE – 25 LBS PER SQ FT (80 MPH)
   SEISMIC DESIGN IS IN ACCORDANCE WITH TM5-809-10 FOR ZONE IV.
4. BLOCK LINTELS SHALL HAVE A MINIMUM BEARING OF 8" AT ENDS.
5. GROUT ALL CELLS OF MASONRY BELOW GRADE AND ALL CELLS WITH REINFORCING STEEL.
6. LAP ALL REINFORCING BARS 40 DIAMETERS
7. ALL WALL, BEAM AND FOOTING REINFORCING SHALL BE CONTINUOUS AT INTERSECTIONS. INSIDE CORNER BARS SHALL BE 90° HOOKED AT OUTSIDE FACE.
8. CONCRETE TO DEVELOP AN ULTIMATE COMPRESSIVE STRESS OF 3000 LBS PER SQ IN. AT 28 DAYS
9. STRUCTURAL STEEL SHALL CONFORM TO ASTM A36.
10. REINFORCING STEEL SHALL CONFORM TO ASTM A615, GRADE 60.
11. CONCRETE COVER OVER REINFORCING SHALL COMPLY WITH ACI-318-77 UNLESS OTHERWISE NOTED.

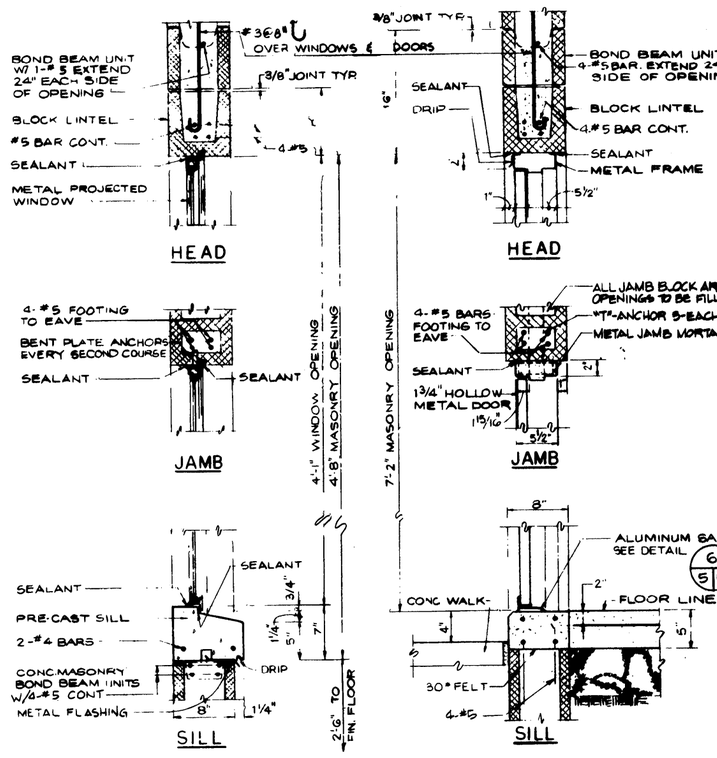

WINDOW SECTION (B / 4/5)
SCALE: 1 1/2"=1'-0"

DOOR SECTION (C / 4/5)
SCALE: 1 1/2"=1'-0"

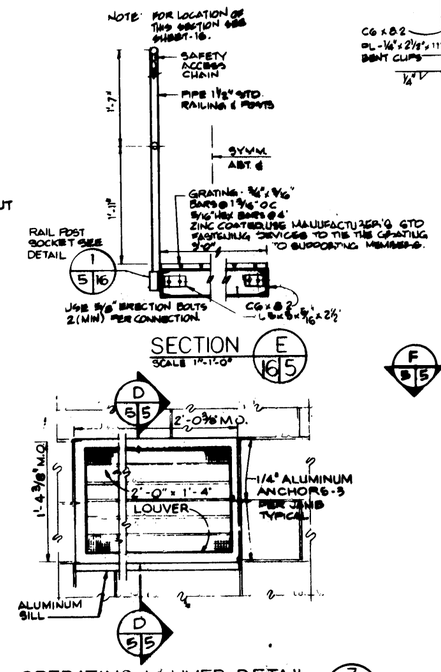

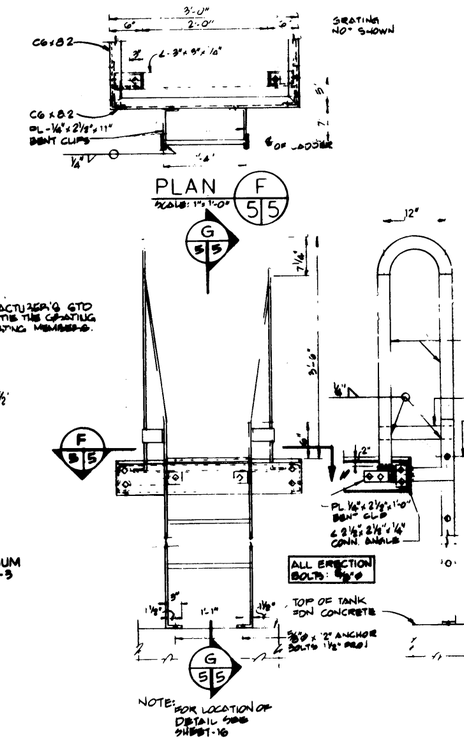

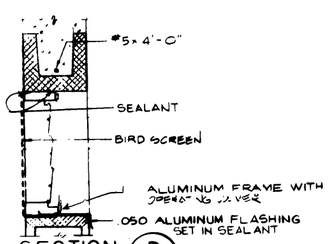

SECTION (D / 5/5)
SCALE: 1 1/2"=1'-0"

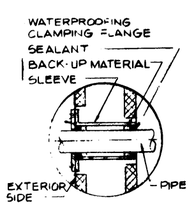

PIPE SLEEVE DETAIL (4 / 4/5)
SCALE: NONE

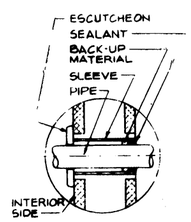

PIPE SLEEVE DETAIL (5 / 4/5)
SCALE: NONE

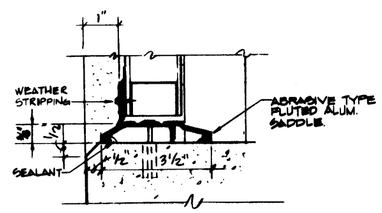

SADDLE (6 / 5/5)
SCALE: 6"=1'-0"

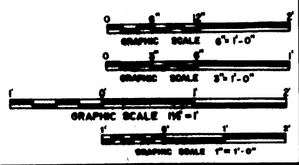

SYMBOL	DESCRIPTION	DATE	APPROVED

REVISIONS

US ARMY ENGINEER DIVISION HUNTSVILLE
CORPS OF ENGINEERS
HUNTSVILLE, ALABAMA

STANDARD AIRCRAFT FUELING SYSTEM FOR ARMY AVIATION

FILTER SEPARATOR HOUSE
INCLOSED TYPE

ARCHITECTURAL & STRUCTURAL SECTIONS & DETAILS

SHEET REF. NO.

DWN. BY | CKD. BY

FILE NO. | SIZE F | DWG. NO. 78-24-20 | REV.

SPEC. NO. | DATE 27/3/78 | SHEET 5 OF 25