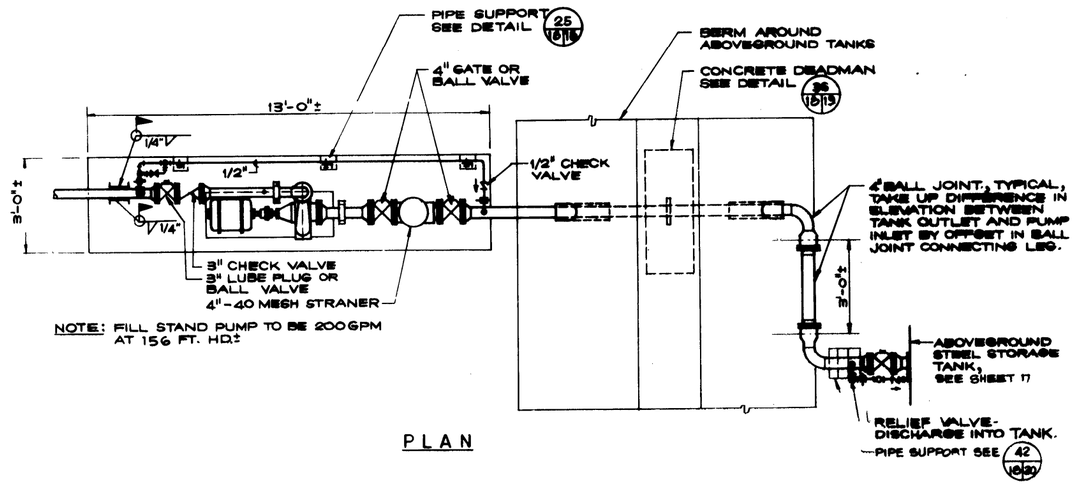

PLAN

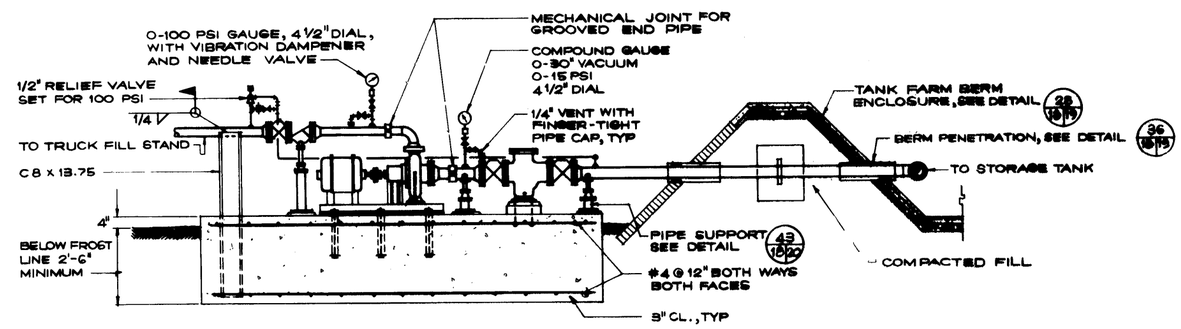

ELEVATION

TRUCK FILL STAND PUMP FOR ABOVEGROUND STEEL TANK INSTALLATION DETAIL 23/15/16
SCALE: 1/2" = 1'-0"
22

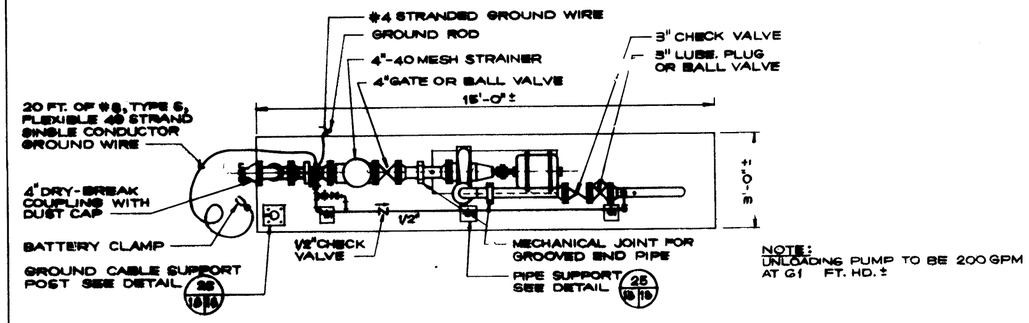

PLAN

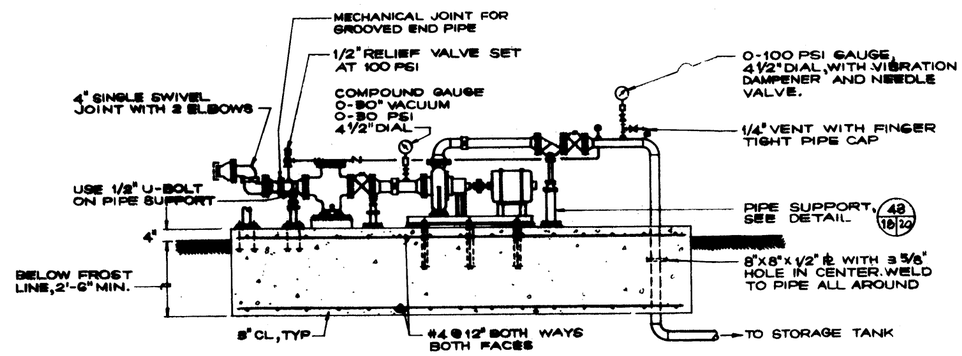

ELEVATION

R.R. TANK CAR AND TANK TRUCK UNLOADING CONNECTION AND PUMP FOR ABOVEGROUND STEEL TANK INSTALLATION - DETAIL 24/15/16
SCALE: 1/2" = 1'-0"
22

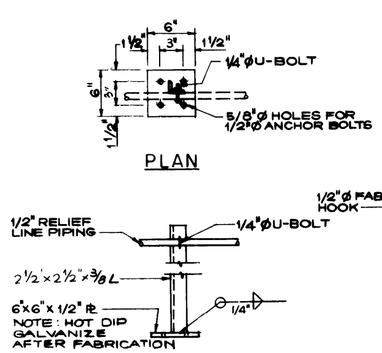

PLAN

ELEVATION

PIPE SUPPORT FOR AUXILIARY PIPING DETAIL 25/15/16
SCALE: 1 1/2" = 1'-0"
15

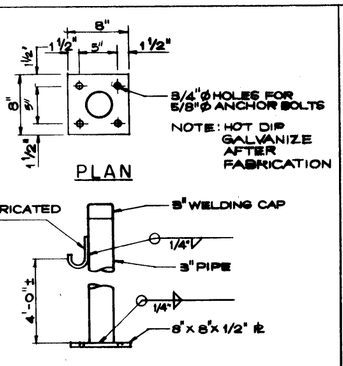

PLAN

ELEVATION

GROUND CABLE SUPPORT DETAIL 26/15/16
SCALE: 1 1/2" = 1'-0"

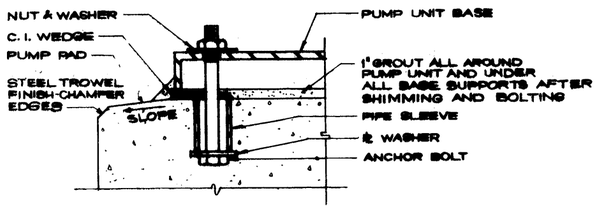

TYPICAL PUMP BASE ANCHOR DETAIL 27/15,15/16
NOT TO SCALE

NOTE: NOMINAL PUMP RATING IS 200 GPM AT 156 FOOT HEAD FOR TRUCK FILL STAND AND 200 GPM AT 61 FOOT HEAD FOR RR TANK CAR AND TRUCK UNLOADING PUMP. PUMP HEAD AND DRIVE MOTOR HORSEPOWER TO BE REVISED FOR EACH SITE APPLICATION.

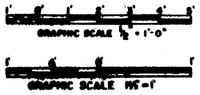

SYM.	DESCRIPTION	DATE	APPROVED
	REVISIONS		

KELLER & GANNON
ENGINEERS • ARCHITECTS • CONSULTANTS
870 BRANNAN STREET SAN FRANCISCO 94103

US ARMY ENGINEER DIVISION HUNTSVILLE
CORPS OF ENGINEERS
HUNTSVILLE, ALABAMA

STANDARD AIRCRAFT FUELING SYSTEM FOR ARMY AVIATION

ABOVEGROUND STEEL TANKS PUMPING FACILITIES

SHEET REF. NO.

DWN. BY CPE | CKD. BY TMR

FILE NO. | SIZE F | DWG. NO. 78-24-20 | REV.
SPEC. NO. | DATE 5/13/63 | SHEET 18 OF 28