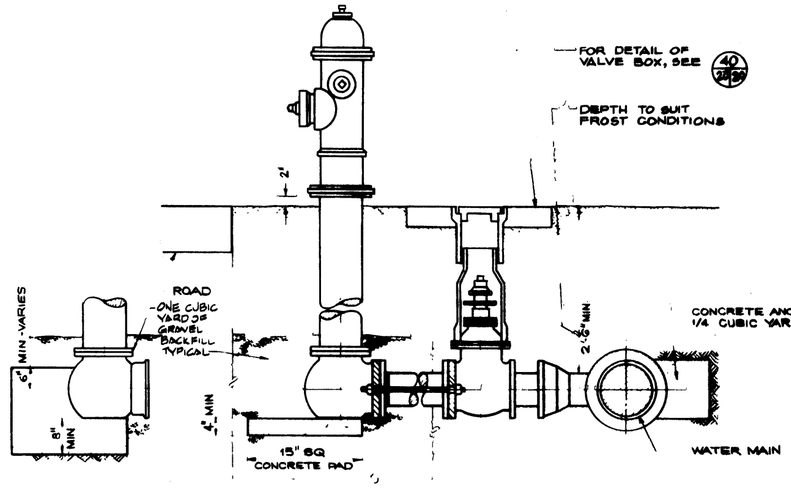

CONC. ANCHOR BLOCK
ALTERNATE TO TIES

TYPICAL HYDRANT INSTALLATION-DETAIL 38/3/2/20
NOT TO SCALE

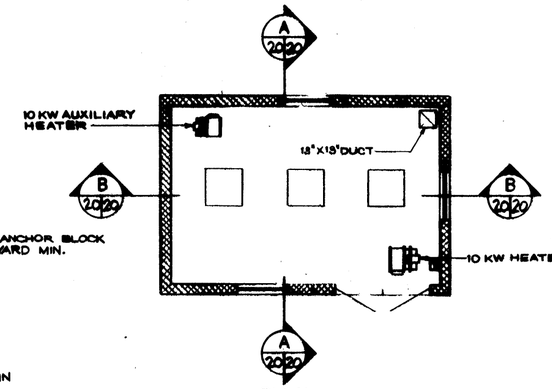

PLAN
SCALE: 1/4"=1'-0"

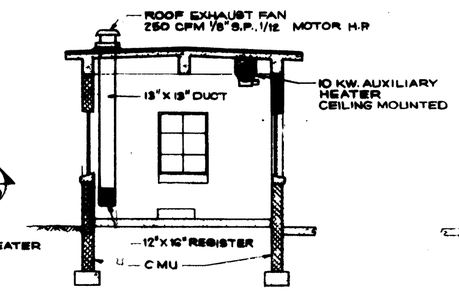

SECTION A 20/20
SCALE: 1/4"=1'-0"

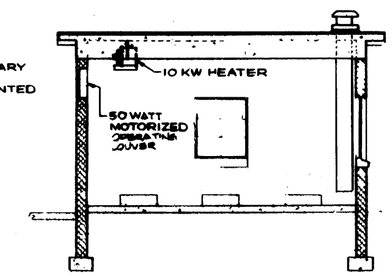

SECTION B 20/20
SCALE: 1/4"=1'-0"

INCLOSED TYPE FILTER SEPARATOR HOUSE HEATING AND VENTILATING-DETAIL 39/7/20
(NOT REQUIRED FOR OPEN TYPE)

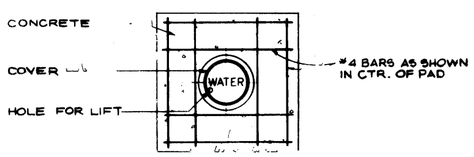

PLAN

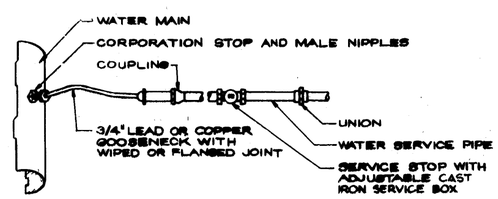

CONNECTION FOR WATER SERVICE LINE-DETAIL 41/3/2/20
NOT TO SCALE

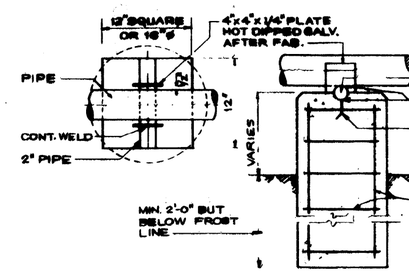

TYPICAL PIPE SUPPORT
TYPE 1-DETAIL 42/2,3/18/20
SCALE: 1/2"=1'-0"
(ON UNDISTURBED GROUND)

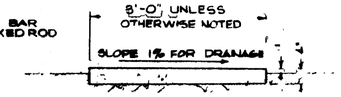

SIDEWALK SECTION

CONTRACTION JOINT

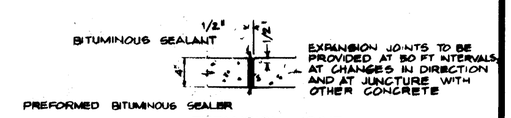

EXPANSION JOINT

TYPICAL SIDEWALK-DETAIL 44/3/2/20
(NOT TO SCALE)

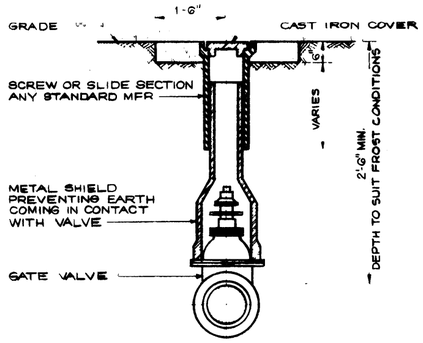

TYPICAL DETAIL STANDARD C.I. VALVE BOX
FOR SECTIONALIZING HYDRANT AND
SERVICE CONNECTION VALVES
DETAIL 40/3/2/20
NOT TO SCALE

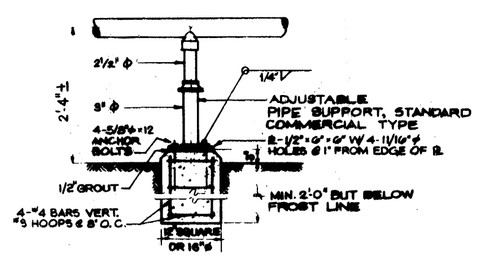

TYPICAL PIPE SUPPORT
TYPE 2-DETAIL 43/18/20
SCALE: 1"=1'-0"
12

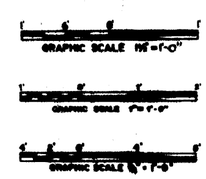

STAT.	REVISIONS	DATE	APPROVED

KELLER & GANNON
ENGINEERS · ARCHITECTS · CONSULTANTS
100 BRADDOCK STREET SAN FRANCISCO 94102

US ARMY ENGINEER DIVISION HUNTSVILLE
CORPS OF ENGINEERS
HUNTSVILLE, ALABAMA

STANDARD AIRCRAFT FUELING SYSTEM
FOR ARMY AVIATION

FILTER SEPARATOR HOUSE
HEATING AND VENTILATING, WATER
DISTRIBUTION, PIPE SUPPORTS
AND SIDEWALK DETAILS

SHEET REF. NO.

DWN. BY HP | CHKD. BY TMR | SPEC. NO. | DATE 5/13/83 | FILE NO. | SIZE F | DWG. NO. 78-24-20 | REV. | SHEET 20 OF 25