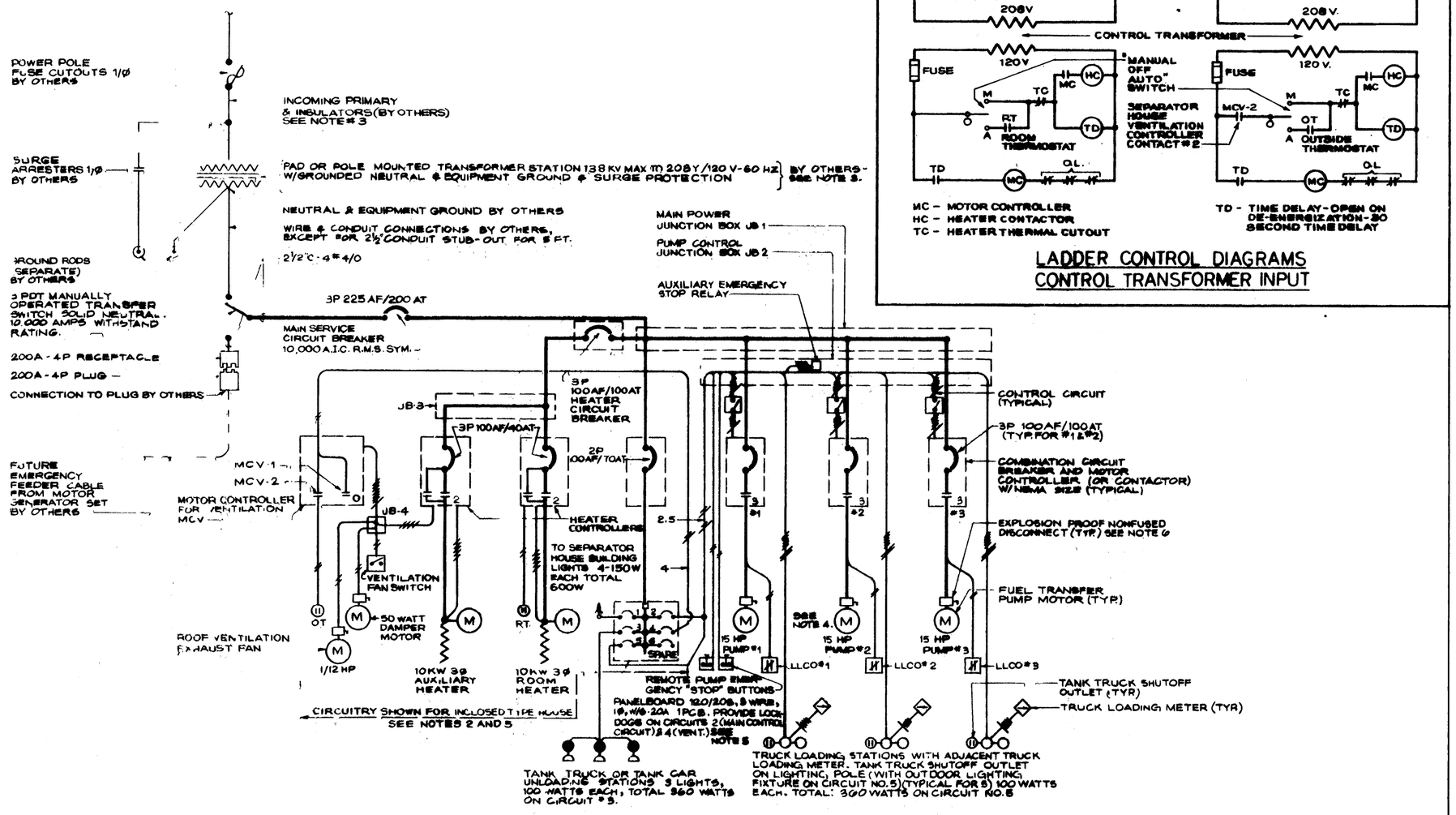

SINGLE LINE DIAGRAM

SEE NOTE # 1

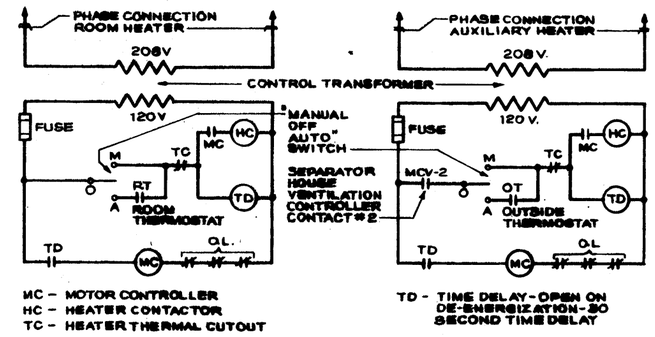

LADDER CONTROL DIAGRAMS
CONTROL TRANSFORMER INPUT

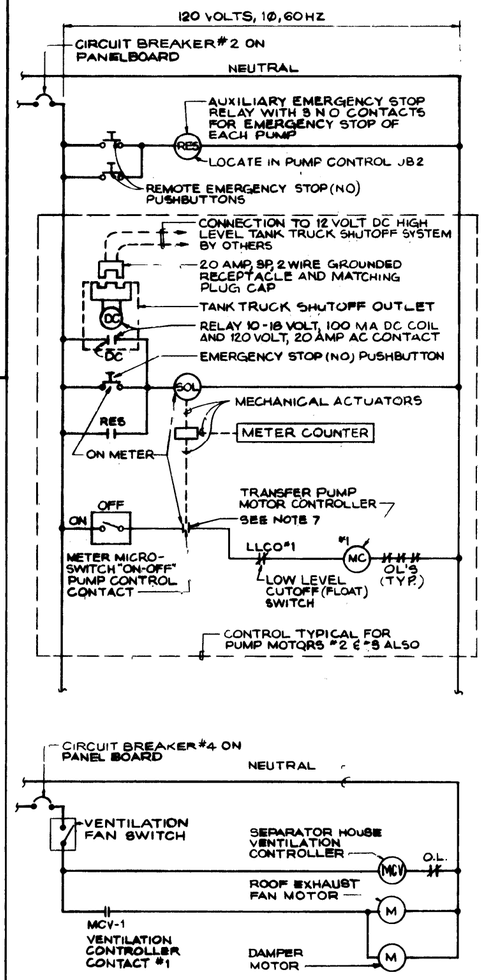

LADDER CONTROL DIAGRAMS
PANELBOARD INPUT

NOTES:

1. FOR WIRE AND CONDUIT SIZES NOT SHOWN ON THIS DIAGRAM, SEE PLAN, SHEET NO. 21 AND ELEVATION (1/24 23)
2. OMIT MAIN AND AUXILIARY HEATERS AND ROOF VENTILATION EQUIPMENT, IF "OPEN TYPE HOUSE" IS SELECTED FOR CONSTRUCTION.
3. PRIMARY FEEDER VOLTAGE (13,800 VOLTS OR UNDER) WILL VARY WITH SITE LOCATION.
4. PUMP MOTORS ARE SHOWN AS NOMINAL 30 HORSEPOWER ACTUAL HORSEPOWER WILL VARY WITH EACH SITE
5. MODIFY PANELBOARD AS SHOWN ON DIAGRAM "A", IF "OPEN TYPE HOUSE" IS SELECTED FOR CONSTRUCTION.
6. MOTOR NONFUSED DISCONNECT SWITCH SIZES
   15 HP MOTORS ---- 3 POLE, [illegible] AMP
   VENTILATION FAN MOTORS ---- 1 POLE, 20 AMP
7. MICROSWITCH IS CLOSED WHEN METER IS MANUALLY ACTUATED. MICROSWITCH IS OPENED WHEN METER REACHES PRESET VALUE OR SOLENOID IS MOMENTARILY ENERGIZED. AUXILIARY EMERGENCY STOP RELAY CONTACTS SHALL HAVE INSTANTANEOUS CLOSURE AND ONE MINUTE TIME DELAY OPENING AFTER COIL IS DEENERGIZED.
8. INSTALL PROPERLY SIZED GROUNDING CONDUCTOR IN ALL POWER CONDUITS.
9. SEE NOTE 1, SHEET 21 FOR HAZARDOUS CLASSIFICATION.
10. CONTRACTOR RESPONSIBLE FOR SITE-ADAPTATION DESIGN SHALL EVALUATE THE NEED FOR POWER FACTOR CORRECTION CAPACITORS FOR MOTORS 2 HP AND LARGER; AND PROVIDE XFMR GROUNDING DETAIL.

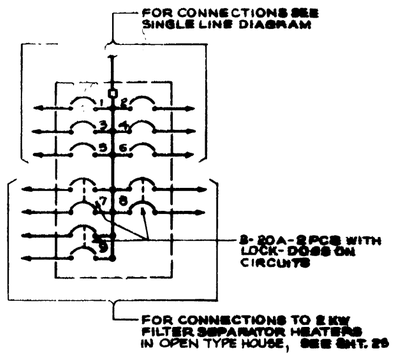

DIAGRAM "A"

SEE NOTE # 5

DISTRIBUTION PANELBOARD SCHEDULE FOR OPEN TYPE HOUSE.
120/208-VOLTS, 1Ø, 3-WIRE, 60A, MAIN LUGS ONLY.
10,000 AIC RMS SYMMETRICAL.

CKT. NO.	TRIP AMP	NO. POLES	WIRE SIZE	LOAD SERVED	LOAD VA	PHASE VA Ø A	PHASE VA Ø B	LOAD VA	LOAD SERVED	WIRE SIZE	NO. POLES	TRIP AMPS	CKT NO.
1	20	1	2#12	SEP. HSE.	600	600 / 100		100	RELAYS	2#12	1	20	2
3	20	1	2#12	TK. UNL.	360		360 / 200	200	VENT.	2#12	1	20	4
5	20	1	2#12	TK LDE.	360	360 / 600		600	SPARE	—	1	20	6
7	20	2	2#2	HTRS.	2000	1000 / 1000	1000 / 1000	2000	HTRS.	2#2	2	20	8
9	20	2	2#2	HTRS.	2000	1000	1000	—	SPACE	—	—	—	10
				TOTAL		4460	3560						

TOTAL CONNECTED LOAD 8020 KVA

DISTRIBUTION PANELBOARD SCHEDULE FOR INCLOSED TYPE HOUSE
120/208-VOLTS, 1Ø, 3-WIRE, 60A, MAIN LUGS ONLY.
10,000 AIC RMS SYMMETRICAL.

CKT. NO.	TRIP AMP	NO. POLES	WIRE SIZE	LOAD SERVED	LOAD VA	PHASE VA Ø A	PHASE VA Ø B	LOAD VA	LOAD SERVED	WIRE SIZE	NO. POLES	TRIP AMPS	CKT. NO.
1	20	1	2#12	SEP. HSE.	600	600 / 100		100	RELAYS	2#12	1	20	2
3	20	1	2#12	TK. UNL.	360		360 / 600	600	—	—	1	20	4
5	20	1	2#12	TK. LDE.	360	360 / 600		600	—	—	1	20	6
				TOTAL		1660	960						

TOTAL CONNECTED LOAD 2620 KVA

SYM.	ZONE	DATE	APPROVED

REVISIONS

KELLER & GANNON
ENGINEERS - ARCHITECTS - CONSULTANTS
225 BUSH STREET, SAN FRANCISCO 94104

US ARMY ENGINEER DIVISION HUNTSVILLE
CORPS OF ENGINEERS
HUNTSVILLE, ALABAMA

STANDARD AIRCRAFT FUELING SYSTEM FOR ARMY AVIATION

SINGLE LINE DIAGRAM AND LADDER CONTROL DIAGRAM FOR UNDERGROUND TANKS

ELECTRICAL

SHEET REF. NO.

DSN. BY HP | DWN. BY BC | CKD. BY TMR

FILE NO. | SIZE F | DWG. NO. 78-24-20 | REV.

SPEC. NO. | DATE: 5/12/83 | SHEET 24 OF 25