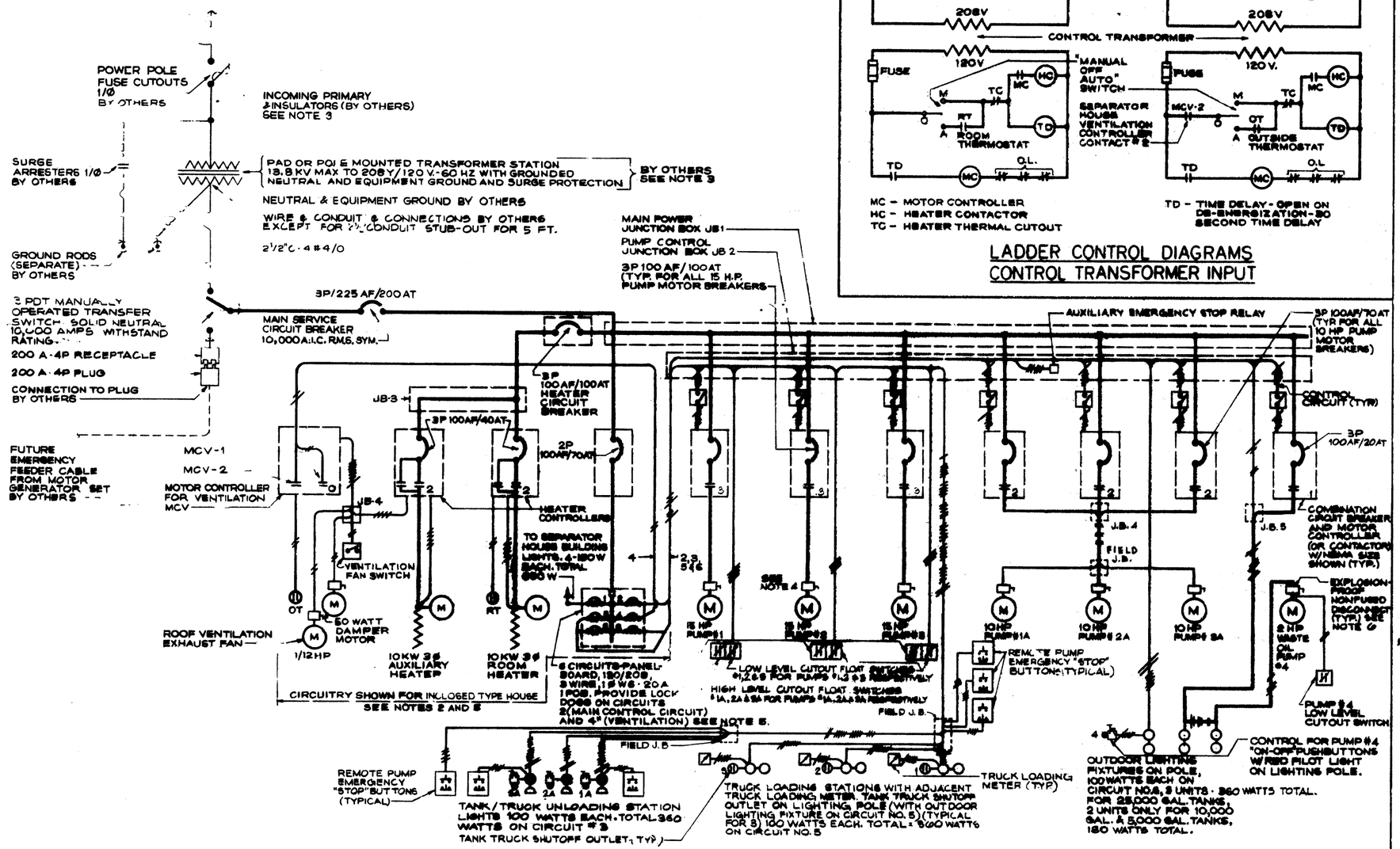

SINGLE LINE DIAGRAM

SEE NOTE #1

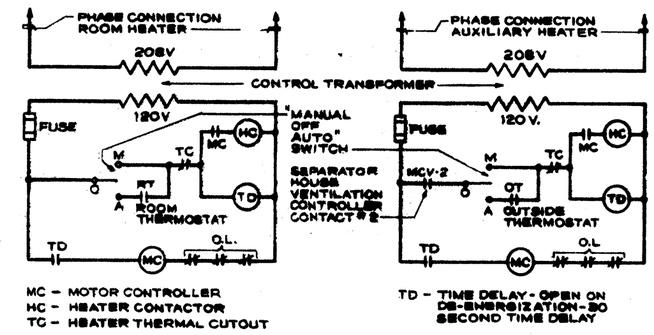

LADDER CONTROL DIAGRAMS
CONTROL TRANSFORMER INPUT

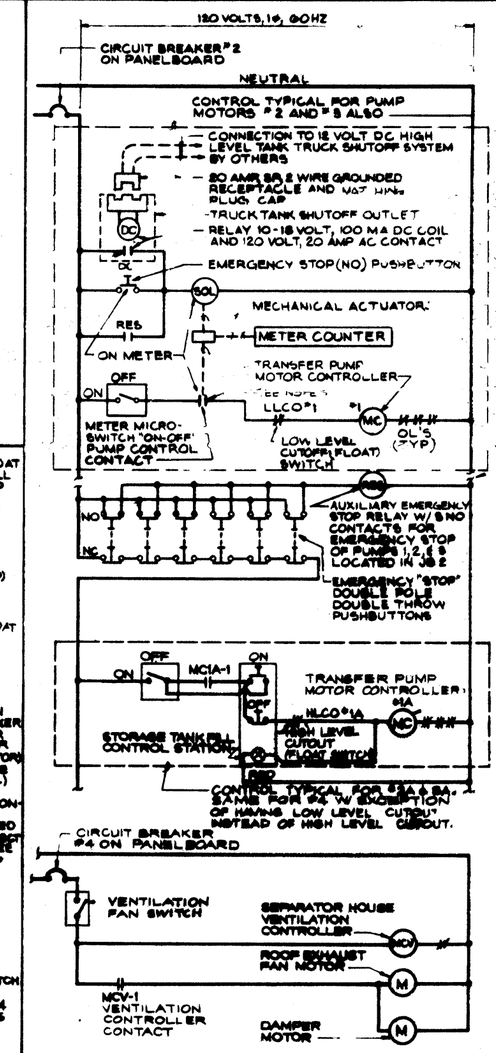

LADDER CONTROL DIAGRAMS
PANELBOARD INPUT

NOTES:

1. FOR WIRE AND CONDUIT SIZES NOT SHOWN ON THIS DIAGRAM. SEE PLAN, SHEET NO. 22 AND ELEVATION DETAIL (2/23/23)
2. OMIT MAIN AND AUXILIARY HEATERS AND ROOF VENTILATION EQUIPMENT, IF "OPEN TYPE HOUSE" IS SELECTED FOR CONSTRUCTION.
3. PRIMARY FEEDER VOLTAGE (13 800 VOLTS OR UNDER) WILL VARY WITH SITE LOCATION.
4. MAIN PUMP MOTORS ARE SHOWN AS THE NO LOAD HORSEPOWER. ACTUAL HORSEPOWER MAY VARY WITH EACH SITE.
5. MODIFY PANELBOARD AS SHOWN ON DIAGRAM "A", IF "OPEN TYPE HOUSE" IS SELECTED FOR CONSTRUCTION
6. MOTOR NONFUSED DISCONNECT SWITCH SIZES
   - 10 HP MOTORS --- 3 POLE 60 AMP
   - 2 HP MOTORS --- 3 POLE 30 AMP
   - VENTILATION FAN MOTORS --- 1 POLE 20 AMP
   - 15 HP MOTORS --- 3 POLE 100 AMP
7. MICROSWITCH IS CLOSED WHEN METER IS VACANT. ACTUATED MICROSWITCH IS OPENED WHEN METER READING PRESET VALUE OR WHEN OR MOMENTARILY ENERGIZED AUXILIARY EMERGENCY STOP RELAY CONTACTS DO NOT HAVE INSTANTANEOUS CLOSURE AND DO NOT HAVE TIME DELAY OPEN NOT AFTER LOW DEENERGIZED.
8. INSTALL INNER-LINED SHIELD GROUNDING CONDUCTOR IN ALL POWER CONDUITS
9. SEE NOTE 1, SHEET 21 FOR HAZARDOUS CLASSIFICATION
10. CONTRACTOR RESPONSIBLE FOR SITE-ADAPTATION DESIGN SHALL EVALUATE THE NEED FOR POWER FACTOR CORRECTION CAPACITORS FOR MOTORS 2-HP AND LARGER; AND PROVIDE REPAIR GROUNDING DETAIL.
11. SEE SHEET 24 FOR PANELBOARD SCHEDULES. TOTAL CONNECTED LOAD IS 7986 KVA FOR OPEN TYPE AND 2280 KVA FOR INCLOSED TYPE HOUSE.

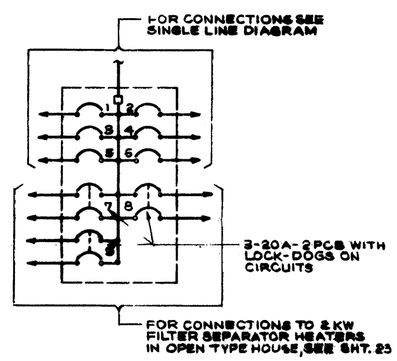

DIAGRAM "A"

SEE NOTE #5

SYM.	ZONE		DATE	APPROVED
		REVISIONS		

KELLER & GANNON ENGINEERING · ARCHITECTS · CONSULTANTS 500 SANSOME STREET, SAN FRANCISCO 94111

US ARMY ENGINEER DIVISION HUNTSVILLE
CORPS OF ENGINEERS
HUNTSVILLE, ALABAMA

STANDARD AIRCRAFT FUELING SYSTEM FOR ARMY AVIATION

SINGLE LINE DIAGRAM AND LADDER CONTROL DIAGRAM FOR ABOVEGROUND TANKS

ELECTRICAL

SHEET REF. NO.

DSN. BY CPS/B.C. CHK. BY TMR

FILE NO. SIZE F DWG. NO. 78-24-20 REV.

SPEC. NO. DATE 5/21/75 SHEET 25 OF 25