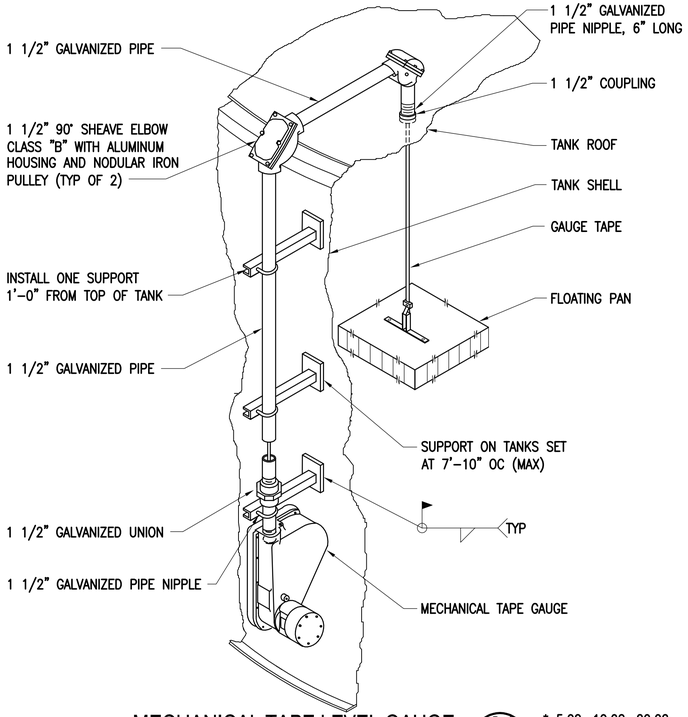

MECHANICAL TAPE LEVEL GAUGE (C1 / D.07)

SCALE: NONE

* 5.02, 10.02, 20.02, 30.02, 40.02, 50.02, 80.02, 100.02

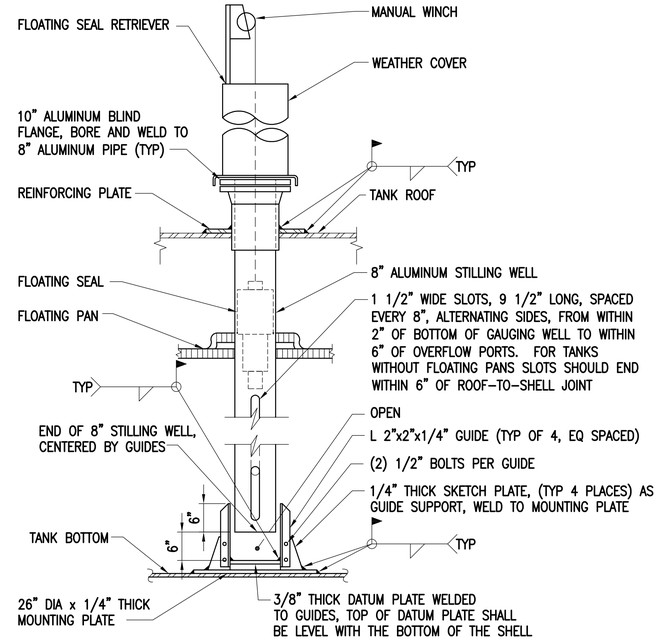

NOTE: DO NOT ATTACH GUIDE SUPPORTS TO STILLING WELL.

SAMPLE GAUGE WELL (C3 / D.07)

SCALE: 3/4"=1'-0"

* 5.02, 10.02, 20.02, 30.02, 40.02, 50.02, 80.02, 100.02

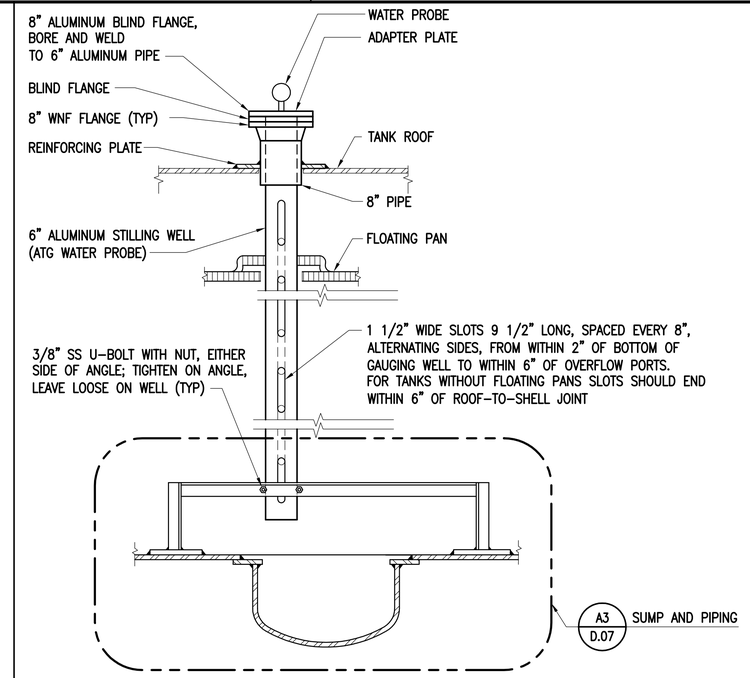

ATG WATER PROBE WELL (C4 / D.07)

SCALE: 3/4"=1'-0"

* 5.02, 10.02, 20.02, 30.02, 40.02, 50.02, 80.02, 100.02

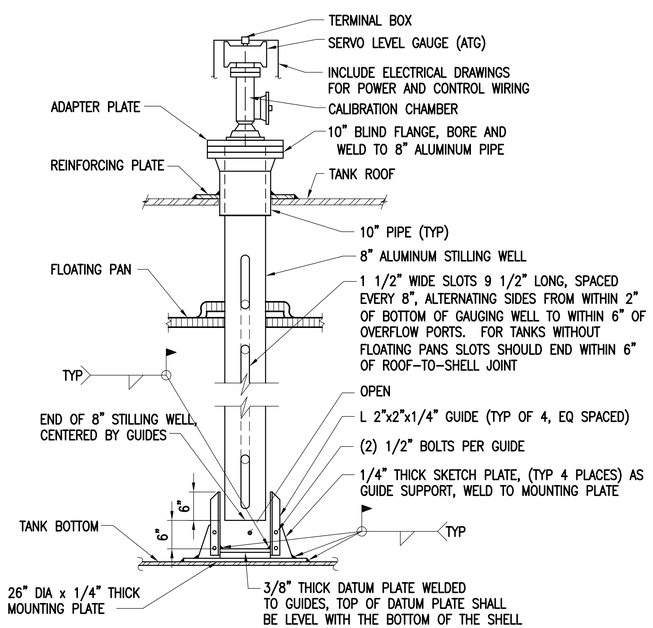

NOTE: DO NOT ATTACH GUIDE SUPPORTS TO STILLING WELL.

ATG GAUGE WELL (A1 / D.07)

SCALE: 3/4"=1'-0"

* 5.02, 10.02, 20.02, 30.02, 40.02, 50.02, 80.02, 100.02

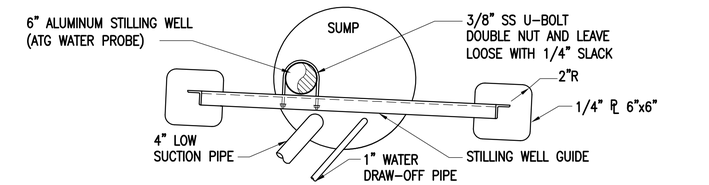

PLAN

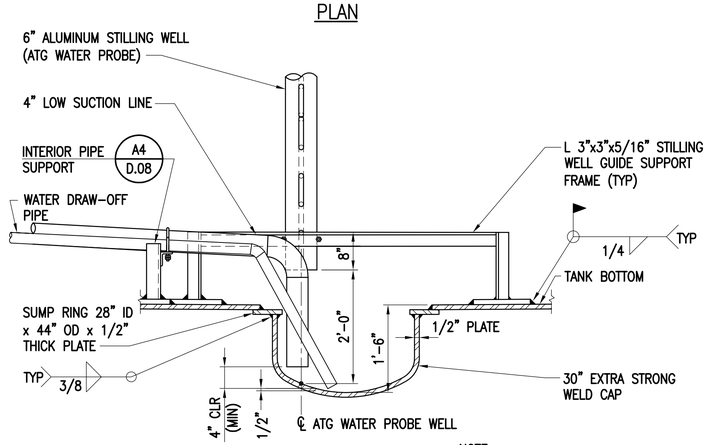

ELEVATION

NOTE: FLOATING PAN NOT SHOWN FOR CLARITY.

SUMP AND PIPING (A3 / D.07)

SCALE: 3/4"=1'-0"

* 5.02, 10.02, 20.02, 30.02, 40.02, 50.02, 80.02, 100.02, D.03, D.07

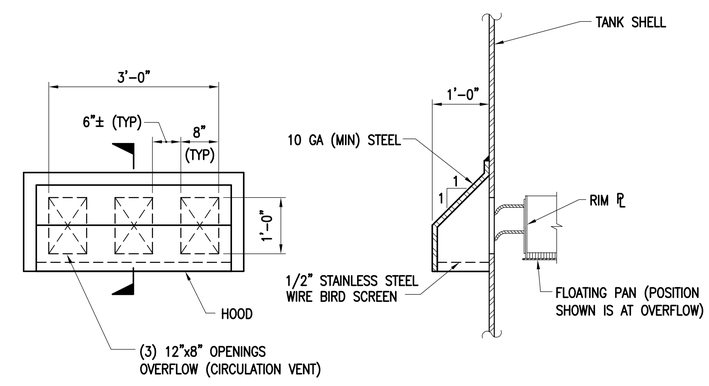

ELEVATION

SECTION

OVERFLOW/CIRCULATION VENT AND SHELL CIRCULATION VENT (A4 / D.07)

SCALE: 3/4"=1'-0"

* 5.02, 10.02, 20.02, 30.02, 40.02, 50.02, 80.02, 100.02

GRAPHIC SCALE(S):

3/4"=1'-0" 1' 0 1' 2' 3'

APPR	
DATE	
DESCRIPTION	
SYM	

NAVFAC

SEAL

Brockenbrough ENGINEERING . CONSULTING
1211 Boulder Springs Drive, Suite 200 | Richmond, Virginia 23225
804.592.3900 main | 804.592.3901 fax
www.brockenbrough.com

A/E INFO

APPROVED

FOR COMMANDER NAVFAC

ACTIVITY: XXXXX

SATISFACTORY TO DATE DD/MM/YY

DES MSO DRW MHK CHK WVB

<<PM/DM>> XXXX

BRANCH MANAGER XX

CHIEF ENG/ARCH XXX

DATE OCTOBER 2011

DEPARTMENT OF THE NAVY
NAVAL FACILITIES ENGINEERING COMMAND
LANT CAPITAL IMPROVEMENTS

NAVAL FACILITIES ENGINEERING COMMAND – ATLANTIC
NORFOLK, VIRGINIA

DOD STANDARD DESIGN AW 78-24-27
ABOVEGROUND VERTICAL STEEL FUEL TANKS WITH FIXED ROOFS

TYPICAL DETAILS – TANK APPURTENANCES

SCALE: AS NOTED

EPROJECT NO.:

CONSTR. CONTR. NO.

NAVFAC DRAWING NO.

SHEET 30 OF 38

D.07

DRAWFORM REVISION: 10 MARCH 2009

FILE NAME: G:\10 Jobs\10-042 Re-start Update AST Standard\CAD\M\D.07 TYPICAL DETAILS – TANK APPURTENANCES.dwg LAYOUT NAME: D.07 TYPICAL DETAILS – TANK APPURTENANCES PLOTTED: Thursday, October 06, 2011 – 2:38pm USER: Guest