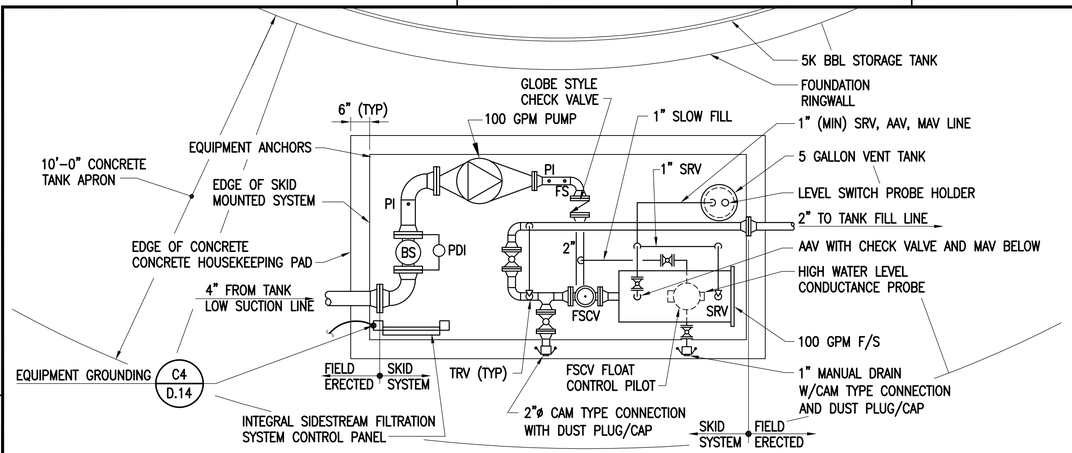

NOTES:

1. SYSTEM SHALL BE FACTORY ASSEMBLED, SKID MOUNTED, FACTORY RUN.
2. PROVIDE ONLY CLASS 1, DIVISION 1, RATED ELECTRICAL COMPONENTS.
3. HEAT TRACE DRAIN PIPING (AND SLOW FILL PIPING TO FIRST VALVE) IN COLD CLIMATES.
4. PIPING ARRANGEMENT SHOWN IS CONCEPTUAL ONLY.
5. COORDINATE LOCATION OF CONCRETE HOUSEKEEPING PAD WITH PAVING JOINTS TO PREVENT CRACKING.

OPTIONAL SIDESTREAM FILTRATION SYSTEM

SCALE: 1/2"=1'-0"

C1 / D.13 *

* G.05, D.12

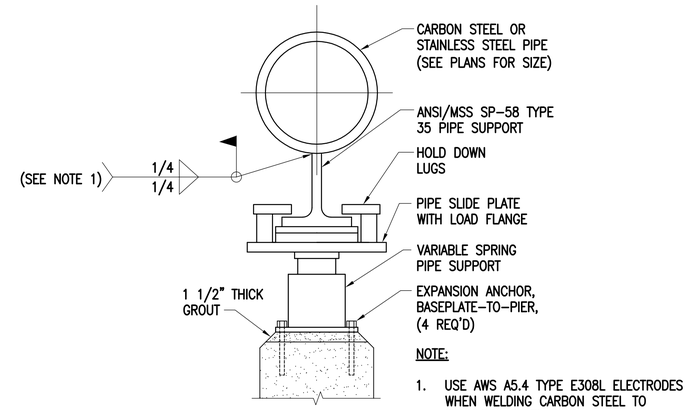

NOTE:

1. USE AWS A5.4 TYPE E308L ELECTRODES WHEN WELDING CARBON STEEL TO STAINLESS STEEL PIPE.

SPRING PIPE SUPPORT

SCALE: NONE

C3 / D.13 / G.07

NOTE:

1. SELECT SPRING SUPPORTS TO PROVIDE FOR MAXIMUM TANK SETTLEMENT.

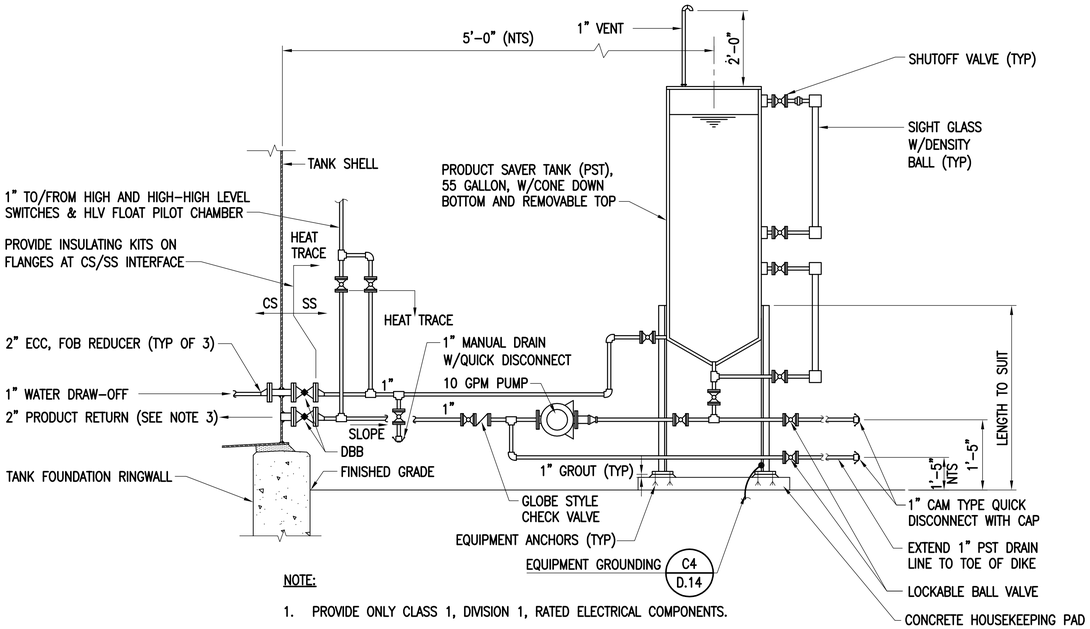

NOTE:

1. PROVIDE ONLY CLASS 1, DIVISION 1, RATED ELECTRICAL COMPONENTS.
2. PROVIDE HEAT TRACING ON DRAIN PIPING WHERE INDICATED WHEN REQUIRED BY COLD CLIMATES.
3. OPTION: PIPE 1" PRODUCT RETURN LINE INTO THE ISSUE NOZZLE ON THE PUMPHOUSE SIDE OF THE TANK SKIN VALVE, INSTEAD OF INTO THE INDICATED SHELL NOZZLE.

WATER DRAW-OFF SYSTEM

SCALE: 1/2"=1'-0"

A1 / D.13 *

* G.05, 5.02, 10.02, 20.02, 30.02, 40.02, 50.02, 80.02, 100.02

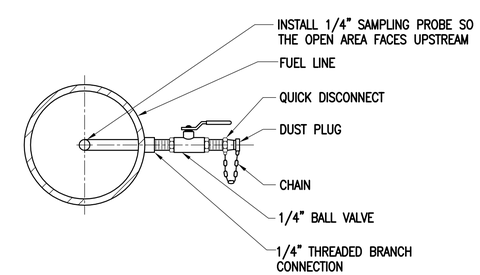

FUEL SAMPLE CONNECTOR

SCALE: NONE

A4 / D.13 *

* D.02, D.08

GRAPHIC SCALE(S):

1/2"=1'-0" 1' 0' 1' 2' 3' 4' 5'

SYM	DESCRIPTION	DATE	APPR

NAVFAC

SEAL

Brockenbrough ENGINEERING . CONSULTING
1211 Boulder Springs Drive, Suite 200 | Richmond, Virginia 23225
804.592.3900 main | 804.592.3901 fax
www.brockenbrough.com

A/E INFO

APPROVED

FOR COMMANDER NAVFAC

ACTIVITY: XXXXX

SATISFACTORY TO DATE DD/MM/YY

DES MSO DRW MHK CHK WVB

<<PM/DM>> XXXX

BRANCH MANAGER XX

CHIEF ENG/ARCH XXX

DATE OCTOBER 2011

DEPARTMENT OF THE NAVY
NAVAL FACILITIES ENGINEERING COMMAND
LANT CAPITAL IMPROVEMENTS

NAVAL FACILITIES ENGINEERING COMMAND – ATLANTIC
NORFOLK, VIRGINIA

DOD STANDARD DESIGN AW 78-24-27
ABOVEGROUND VERTICAL STEEL FUEL TANKS WITH FIXED ROOFS

TYPICAL DETAILS – EXTERNAL APPURTENANCES

SCALE: AS NOTED

EPROJECT NO.:

CONSTR. CONTR. NO.

NAVFAC DRAWING NO.

SHEET 36 OF 38

D.13

DRAWFORM REVISION: 10 MARCH 2009

FILE NAME: G:\10 Jobs\10-042 Re-start Update AST Standard\CAD\M\D.13 TYPICAL DETAILS - EXTERNAL APPURTENANCES.dwg LAYOUT NAME: D.13 TYPICAL DETAILS - EXTERNAL APPURTENANCES PLOTTED: Thursday, October 06, 2011 - 2:38pm USER: Guest