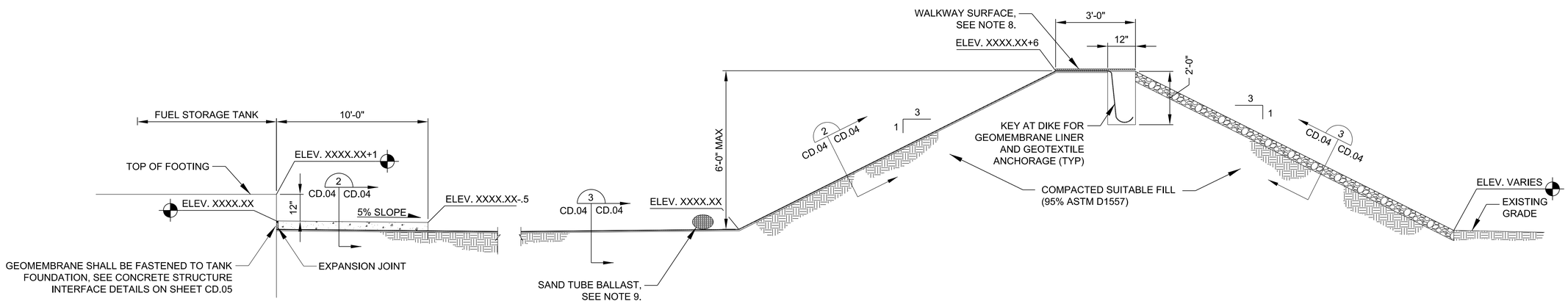

TYPICAL SECTION - SPILL CONTAINMENT DIKES (1 / C.02 | CD.04)

SCALE: NONE

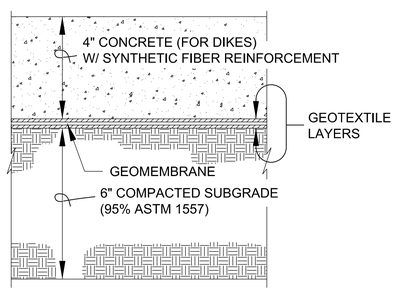

TYPICAL LINER SECTION CONCRETE WORKING SURFACE (2 / CD.04 | CD.04)

SCALE: NONE

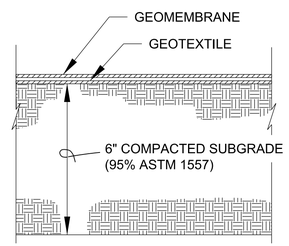

TYPICAL LINER SECTION (3 / CD.04 | CD.04)

SCALE: NONE

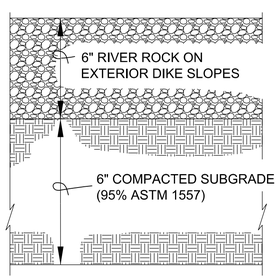

TYPICAL LINER SECTION DIKE EXTERIOR WALLS (W/O LINER) (4 / CD.04 | CD.04)

SCALE: NONE

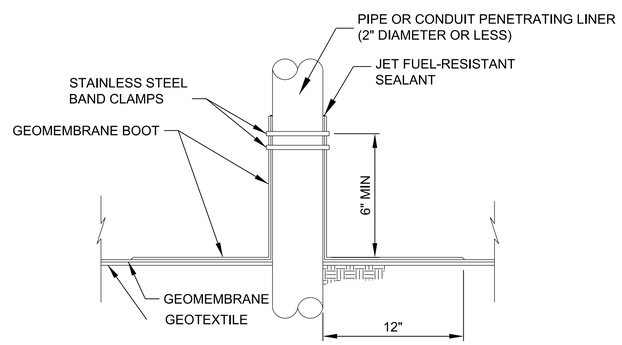

PIPE PENETRATION DETAIL

SCALE: NONE

GENERAL NOTES:

1. ALL CONCRETE SHALL BE REINFORCED WITH SYNTHETIC FIBER REINFORCEMENT. ADDITIONAL STEEL REINFORCEMENT SHALL BE PROVIDED, WHERE INDICATED ON THE JOINT LAYOUT PLAN. SEE SPECIFICATIONS SECTION 32 13 15.20 CONCRETE PAVEMENT FOR CONTAINMENT DIKES FOR CONCRETE AND REINFORCEMENT REQUIREMENTS.
2. PROVIDE A GEOMEMBRANE BOOT FOR ALL CIRCULAR GEOMEMBRANE PENETRATIONS. ALL SMALL LINER PENETRATIONS SHALL BE CIRCULAR TO ACCOMMODATE A BOOT SEAL.
3. ALL CONCRETE JOINTS SHALL BE SEALED PER SPECIFICATIONS SECTION 32 01 19 FIELD MOLDED SEALANTS FOR SEALING JOINTS IN RIGID PAVEMENTS. SEE SHEET C.04 FOR THE JOINT LAYOUT PLAN.
4. A GEOTEXTILE SHALL BE INSTALLED BELOW AND ABOVE THE GEOMEMBRANE WHERE COVERED WITH CONCRETE. A GEOTEXTILE SHALL BE INSTALLED BELOW THE GEOMEMBRANE WHERE THE GEOMEMBRANE IS EXPOSED ON THE SURFACE. SEE SPECIFICATION SECTION 33 56 63 FUEL IMPERMEABLE LINER SYSTEM. THE GEOMEMBRANE AND GEOTEXTILE SHALL BE PROTECTED FROM DAMAGE AT ALL TIMES, AS SPECIFIED.
5. THE SURFACE UNDERLYING THE GEOTEXTILE/GEOMEMBRANE SHALL BE SMOOTH AND FREE OF ROCKS LARGER THAN ½" IN DIAMETER OR ANY OTHER MATERIAL WHICH WOULD COULD DAMAGE THE GEOMEMBRANE LINER.
6. GEOMEMBRANE ANCHORAGE / EMBEDMENT STRIP MATERIALS AND INSTALLATION SHALL BE AS RECOMMENDED BY THE MANUFACTURER OF THE GEOMEMBRANE.
7. ROCK MATERIAL SHALL BE CLEAN, WELL GRADED ⅜" TO 1-½" RIVER ROCK. THE ROCK LAYER SHALL BE COMPACTED WITH TWO PASSES OF A WALK-BEHIND VIBRATORY ROLLER.
8. A SKID RESISTANT WALKWAY SHALL BE PROVIDED ALONG THE 3-FOOT TOP OF DIKE WALK PATH AND ON PATHWAYS WITHIN THE TANK BASIN, AS INDICATED ON THE SITE PLAN. SEE SPECIFICATION SECTION 33 56 63 FUEL IMPERMEABLE LINER SYSTEM, FOR WALKWAY MATERIALS.
9. SAND TUBES SHALL BE PROVIDED ON THE EXPOSED GEOMEMBRANE FOR BALLAST TO PREVENT WIND UPLIFT. SEE SPECIFICATION SECTION 33 56 63 FUEL IMPERMEABLE LINER SYSTEM FOR ADDITIONAL DETAILS.

DESIGNER NOTES:

1. THE GEOTEXTILE LAYERS ARE PROVIDED TO PROTECT THE GEOMEMBRANE DURING AND AFTER CONSTRUCTION. THE BOTTOM GEOTEXTILE LAYER MAY BE OMITTED IF THE SUBGRADE SOIL IS KNOWN TO BE FREE OF ROCKS OR OTHER MATERIALS THAT COULD POTENTIALLY DAMAGE THE GEOMEMBRANE.
2. OTHER BALLAST MATERIALS MAY BE SPECIFIED. WIND UPLIFT CALCULATIONS MUST BE PERFORMED REGARDLESS OF THE BALLAST MATERALS USED. SPECIFICATION SECTION 33 56 63 'FUEL IMPERMEABLE LINER SYSTEM' PROVIDES WIND UPLIFT DESIGN GUIDANCE.

SYM	DESCRIPTION	DATE	APPR

NAVFAC

US ARMY CORPS OF ENGINEERS OMAHA DISTRICT

SEAL

A/E INFO

APPROVED

FOR COMMANDER NAVFAC

ACTIVITY

SATISFACTORY TO

DES RLG | DRW MJR | CHK ELB

SUBMITTED BY:

DATE: APRIL 2015

NAVAL FACILITIES ENGINEERING COMMAND – ALANTIC

DOD STANDARD DESIGN AW78-24-27

FUEL TANKS WITH FIXED ROOFS ABOVEGROUND VERTICAL STEEL

DIKE DETAILS - EXPOSED LINER

SCALE: AS NOTED

EPROJECT NO.: XXXXX

CONSTR. CONTR. NO. XXXXX

NAVFAC DRAWING NO. XXXXX

SHEET 13 OF 57

CD.04

DRAWFORM REVISION: 10 MAY 2014