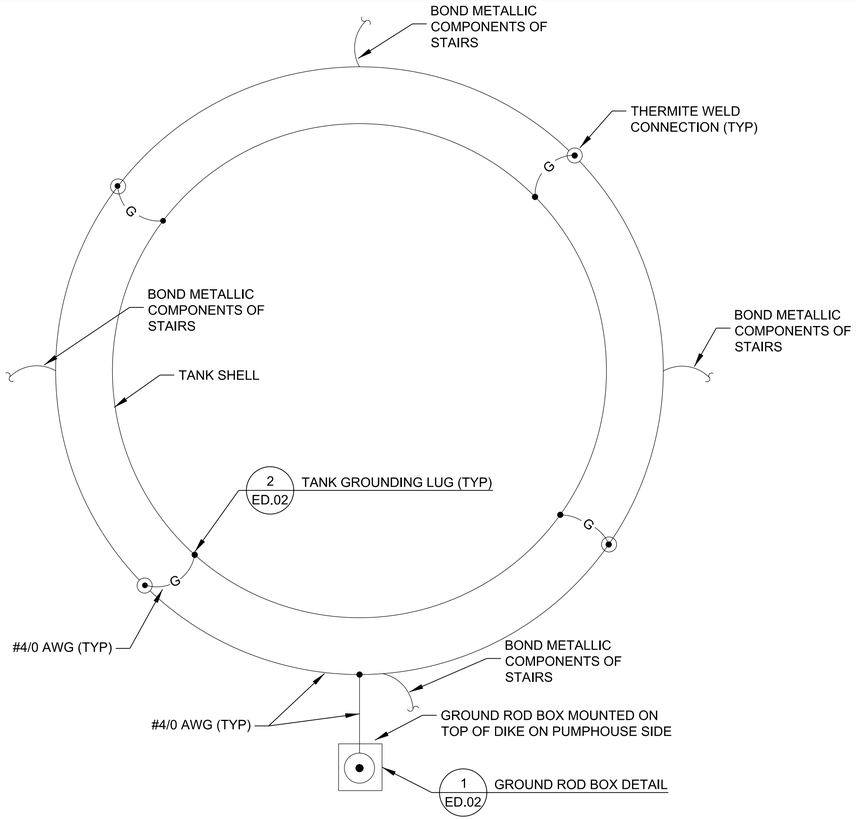

TANK GROUNDING SYSTEM

SCALE: NONE

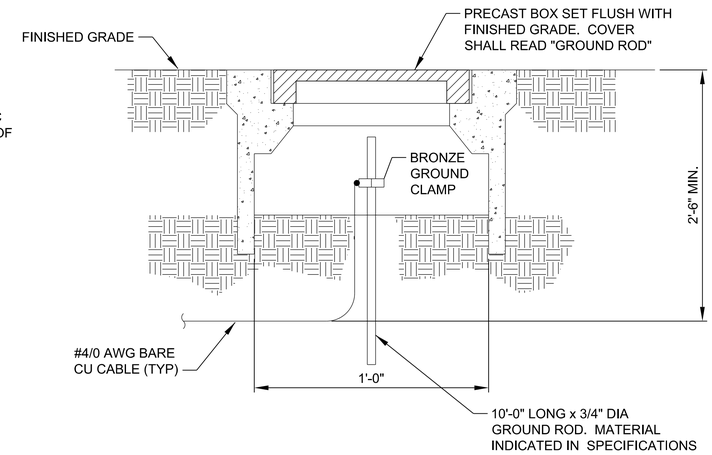

GROUND ROD BOX DETAIL 1 ED.02

SCALE: NONE

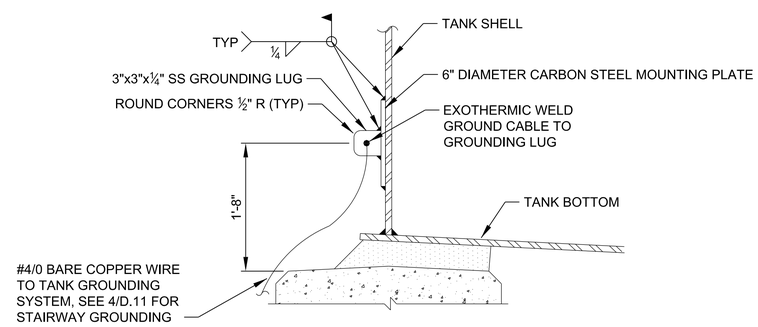

TANK GROUNDING LUG 2 ED.02

SCALE: NONE

SYM	DESCRIPTION	DATE	APPR

NAVFAC

US ARMY CORPS OF ENGINEERS OMAHA DISTRICT

SEAL

A/E INFO

APPROVED

FOR COMMANDER NAVFAC

ACTIVITY

SATISFACTORY TO

DES MSO | DRW MHK | CHK WVB

SUBMITTED BY:

DATE: APRIL 2015

NAVAL FACILITIES ENGINEERING COMMAND – ALANTIC

DOD STANDARD DESIGN AW78-24-27

FUEL TANKS WITH FIXED ROOFS ABOVEGROUND VERTICAL STEEL

TANK GROUNDING PLAN

SCALE: AS NOTED

EPROJECT NO.: XXXXX

CONSTR. CONTR. NO. XXXXX

NAVFAC DRAWING NO. XXXXX

SHEET 25 OF 57

ED.02

DRAWFORM REVISION: 10 MAY 2014