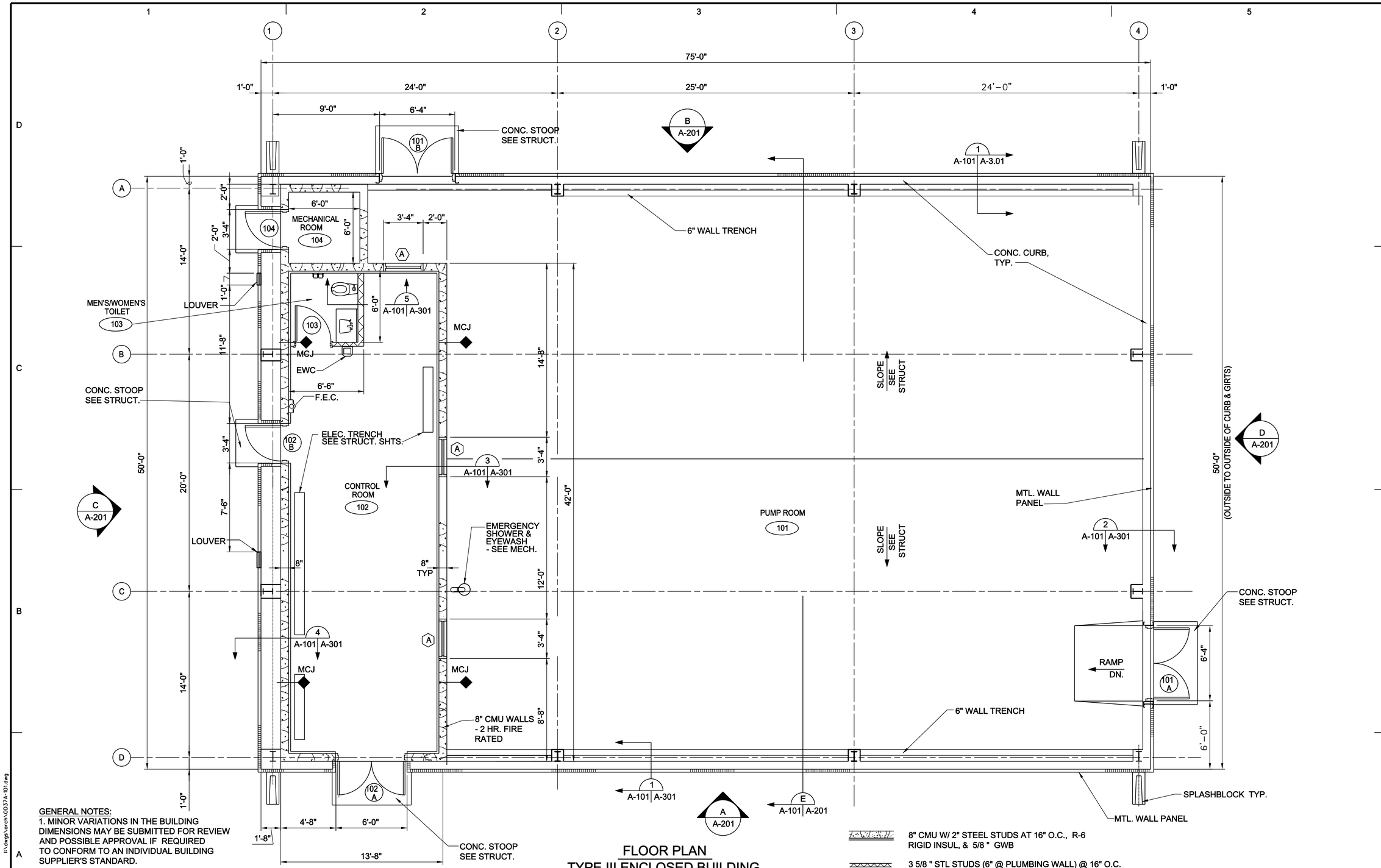

GENERAL NOTES:

1. MINOR VARIATIONS IN THE BUILDING DIMENSIONS MAY BE SUBMITTED FOR REVIEW AND POSSIBLE APPROVAL IF REQUIRED TO CONFORM TO AN INDIVIDUAL BUILDING SUPPLIER'S STANDARD.

2. ALL CMU WALL SHALL BE 8" UNITS.

3. CONFORM TO THE INSTALLATION DESIGN GUIDE AND ARCHITECTURAL COMPTIBILITY STANDARDS FOR ALL APPLICABLE REQUIREMENTS.

FLOOR PLAN
TYPE III ENCLOSED BUILDING

SCALE : $\frac{1}{4}$ INCH = 1 FOOT

8" CMU W/ 2" STEEL STUDS AT 16" O.C., R-6 RIGID INSUL, & 5/8 " GWB

3 5/8 " STL STUDS (6" @ PLUMBING WALL) @ 16" O.C. W/ 5/8 " GWB EA. SIDE

(MCJ) MASONRY CONTROL JOINT LOCATION

US ARMY CORPS OF ENGINEERS
OMAHA DISTRICT

MARK	DESCRIPTION	DATE	APPR.

MARK	DESCRIPTION	DATE	APPR.

U. S. ARMY ENGINEER DISTRICT
CORPS OF ENGINEERS
OMAHA DISTRICT

DESIGNED BY: MDM
DATE: JULY 2010
DWN BY: MDM
CKD BY: CPB
SOLICITATION NO.: Y
SUBMITTED BY: CPB
CONTRACT NO.: X
FILE NAME: 00374-101.dwg
FILE NUMBER: X
SIZE: 33.1X22
PLOT SCALE: 0'-1" = 1" / in.
PLOT DATE: 6/29/2010

DOD PRESSURIZED FUELING SYSTEM TYPE III

PUMP HOUSE
FLOOR PLAN

SHEET IDENTIFICATION NUMBER
A-101

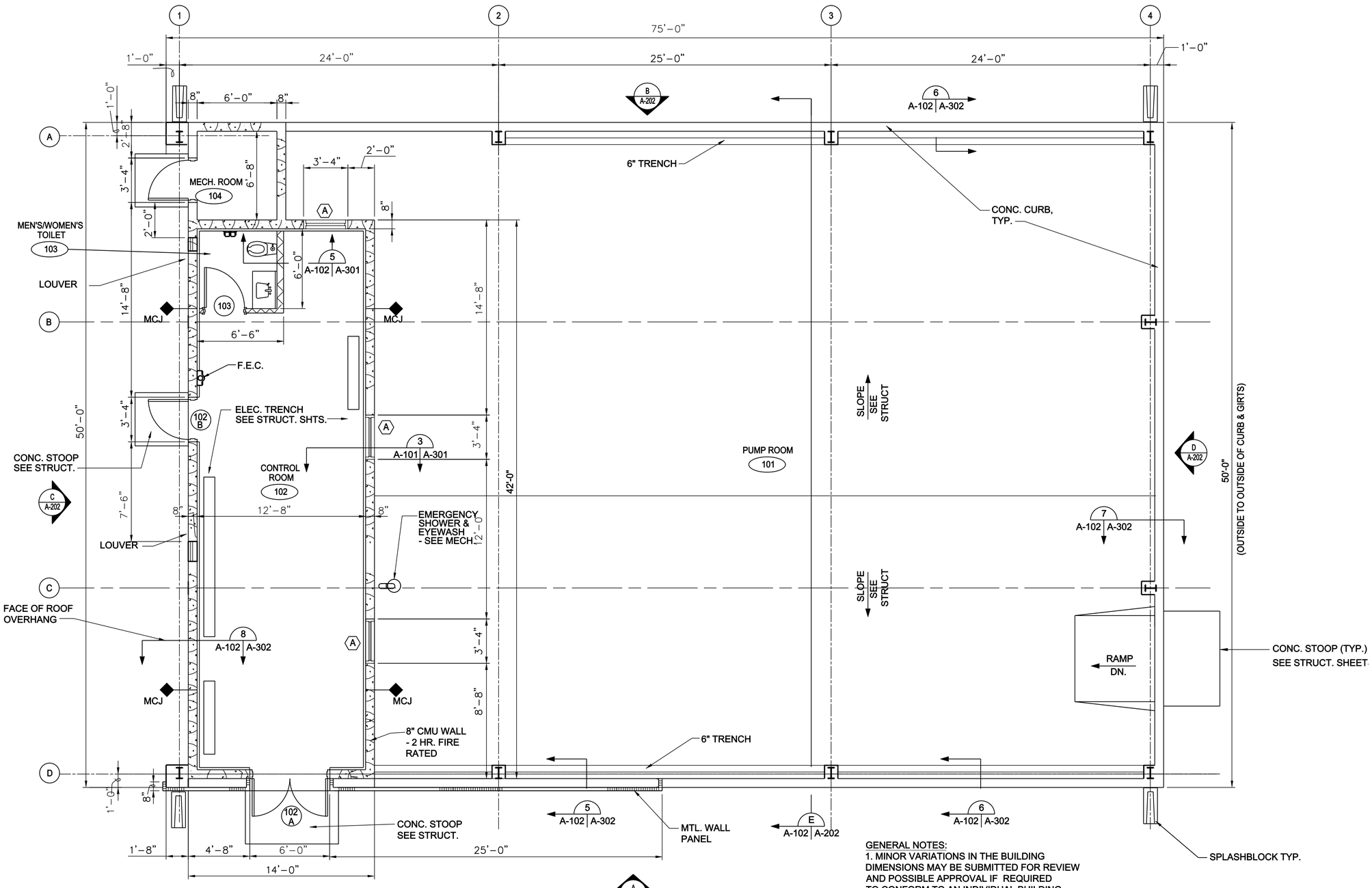

8" CMU W/ 2" STEEL STUDS AT 16" O.C., R-6 RIGID INSUL, & 5/8 " GWB

3 5/8 " STL STUDS (6" @ PLUMBING WALL) @ 16" O.C. W/ 5/8 " GWB EA. SIDE

(MCJ) MASONRY CONTROL JOINT LOCATION

FLOOR PLAN

GENERAL NOTES:

1. MINOR VARIATIONS IN THE BUILDING DIMENSIONS MAY BE SUBMITTED FOR REVIEW AND POSSIBLE APPROVAL IF REQUIRED TO CONFORM TO AN INDIVIDUAL BUILDING SUPPLIER'S STANDARD.

2. ALL CMU WALL SHALL BE 8" UNITS.

3. CONFORM TO THE INSTALLATION DESIGN GUIDE AND ARCHITECTURAL COMPTIBILITY STANDARDS FOR ALL APPLICABLE REQUIREMENTS.

US ARMY CORPS OF ENGINEERS
OMAHA DISTRICT

MARK	DESCRIPTION	DATE	APPR.

MARK	DESCRIPTION	DATE	APPR.

U. S. ARMY ENGINEER DISTRICT
CORPS OF ENGINEERS
OMAHA DISTRICT

DESIGNED BY: MDM
DATE: JULY 2010
DWN BY: MDM
CKD BY: GFB
SOLICITATION NO.: Y
SUBMITTED BY: GFB
CONTRACT NO.: X
FILE NAME: 00374-102.dwg
FILE NUMBER: X
SIZE: 33X22
PLOT SCALE: 0'-1" : 1" in.
PLOT DATE: 6/29/2010

DOD PRESSURIZED FUELING SYSTEM TYPE III

PUMP SHELTER
FLOOR PLAN

SHEET IDENTIFICATION NUMBER
A-102

I:\dwgs\arch\00374-102.dwg
g6edxmdm

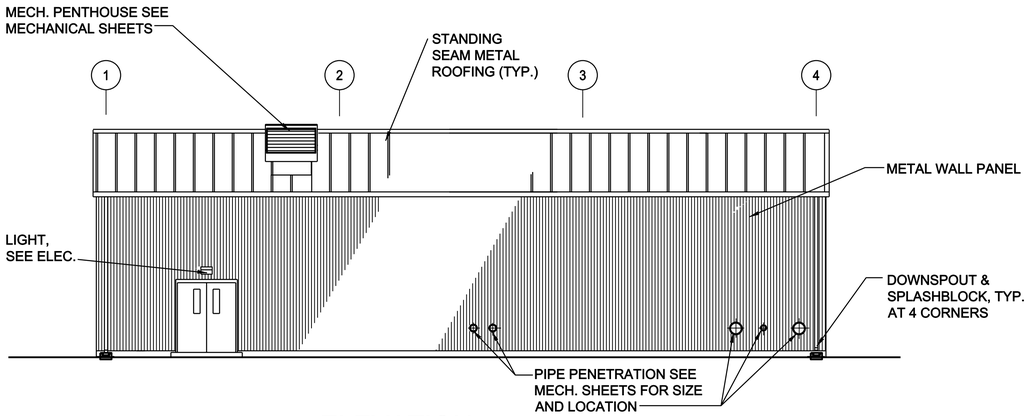

ELEVATION A A-101 | A-201

SCALE : 1/8 INCH = 1 FOOT

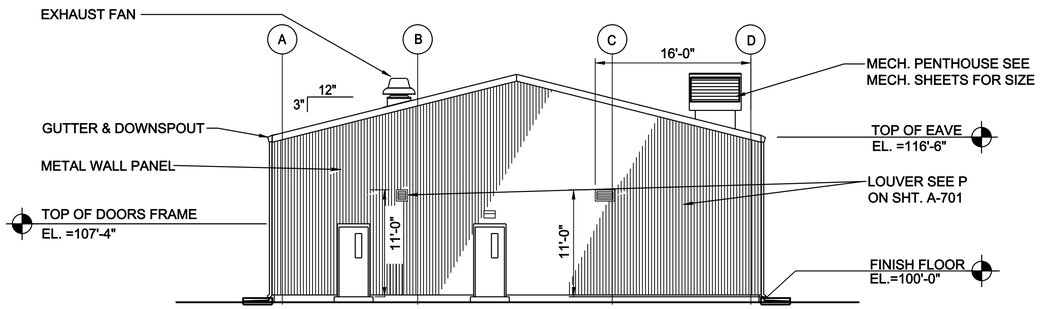

ELEVATION C A-101 | A-201

SCALE : 1/8 INCH = 1 FOOT

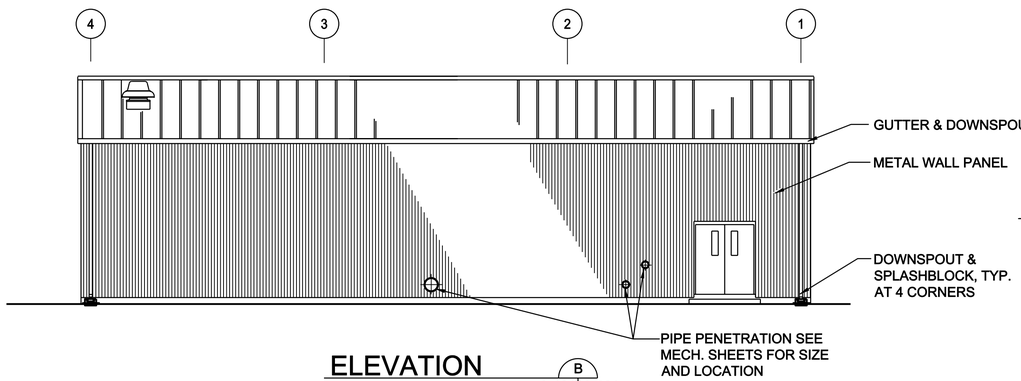

ELEVATION B A-101 | A-201

SCALE : 1/8 INCH = 1 FOOT

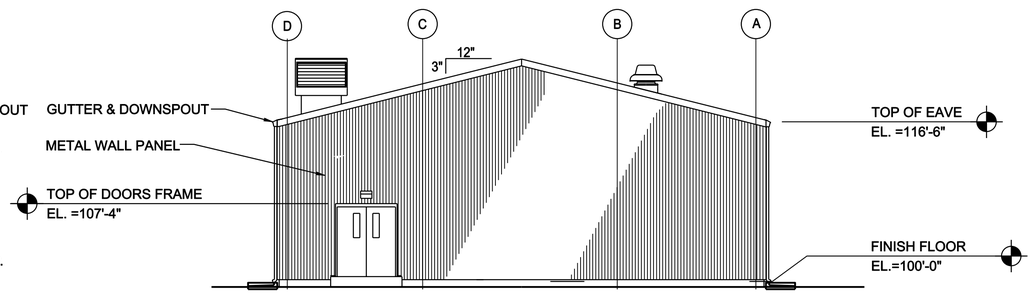

ELEVATION D A-101 | A-201

SCALE : 1/8 INCH = 1 FOOT

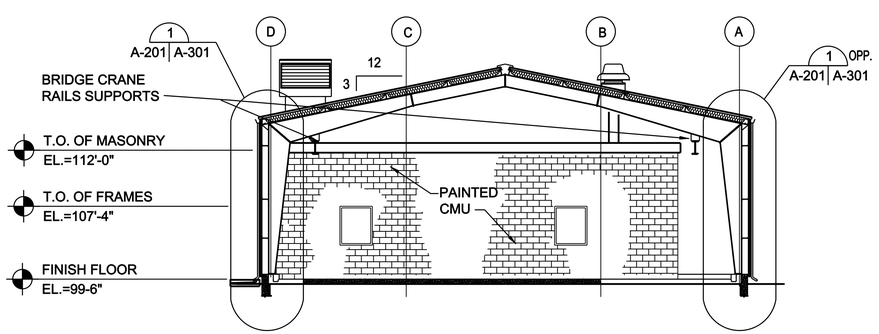

BUILDING SECTION E A-101 | A-201

SCALE : 1/8 INCH = 1 FOOT

GENERAL NOTES:

1. ROOF SLOPES SHOWN ARE A MINIMUM AND SHALL BE COORDINATED WITH THE INSTALLATION STANDARDS AND GEOGRAPHIC CONDITIONS AS REQUIRED TO ACCOMMODATE SNOW AND OTHER LOADING CONDITIONS.

US ARMY CORPS OF ENGINEERS
OMAHA DISTRICT

MARK	DESCRIPTION	DATE	APPR.

MARK	DESCRIPTION	DATE	APPR.

U. S. ARMY ENGINEER DISTRICT
CORPS OF ENGINEERS
OMAHA DISTRICT

DESIGNED BY: MDM | DATE: JULY 2010
DWN BY: MDM | CKD BY: GPB | SOLICITATION NO.: Y
SUBMITTED BY: GPB | CONTRACT NO.: X
FILE NAME: 0037A-201.dwg | FILE NUMBER: X
SIZE: 33.1X22 | PLOT SCALE: 0"=1" ";" / in. | PLOT DATE: 6/29/2010

DOD PRESSURIZED FUELING SYSTEM TYPE III

PUMPHOUSE
BUILDING ELEVATIONS
AND BUILDING SECTION

SHEET IDENTIFICATION NUMBER
A-201

I:\dwgs\arch\0037A-201.dwg
g6edxmdm

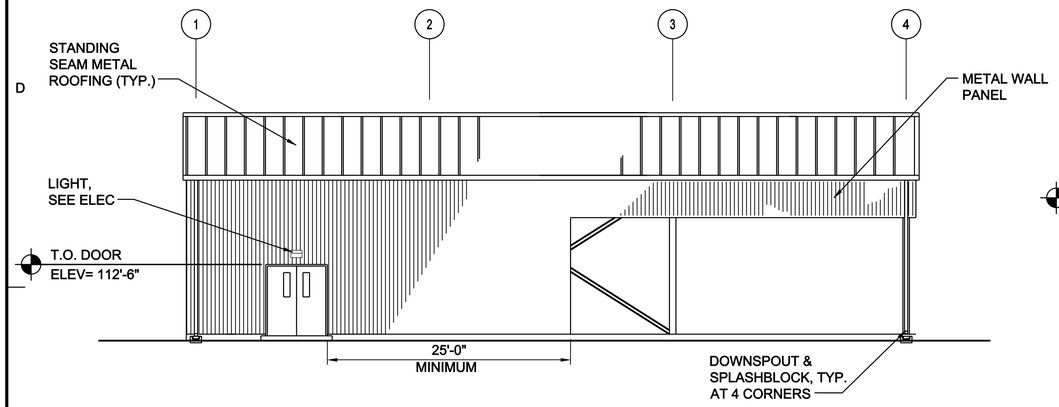

ELEVATION (A) A-102 | A-202
SCALE: 1/8 INCH = 1 FOOT

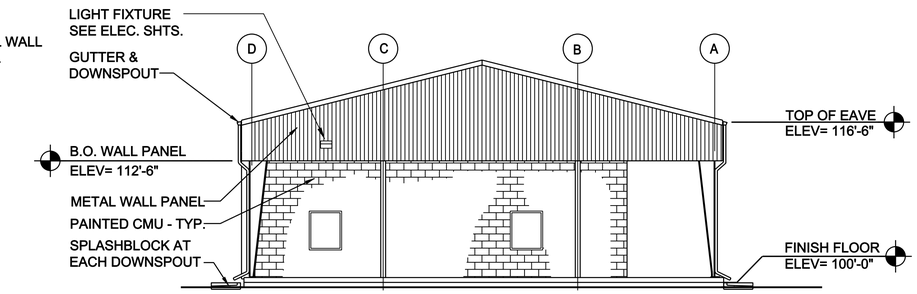

ELEVATION (D) A-102 | A-202
SCALE: 1/8 INCH = 1 FOOT

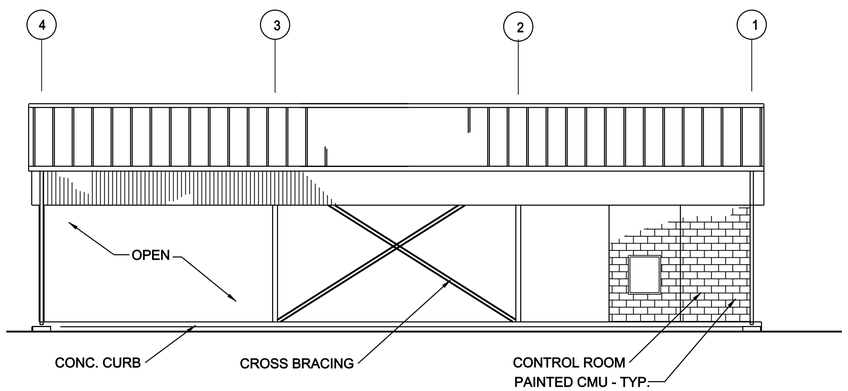

ELEVATION (B) A-102 | A-202
SCALE: 1/8 INCH = 1 FOOT

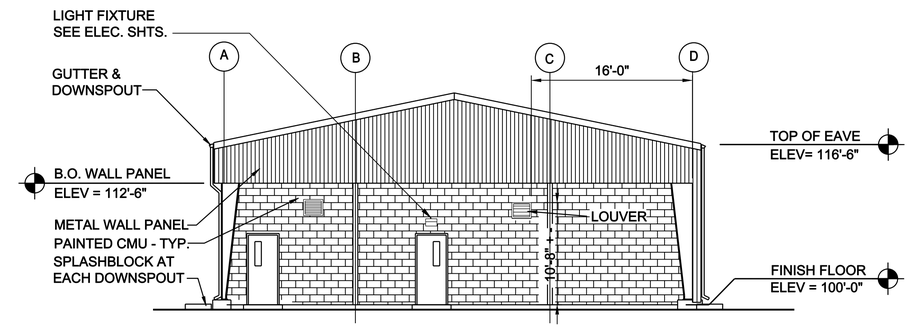

ELEVATION (C) A-102 | A-202
SCALE: 1/8 INCH = 1 FOOT

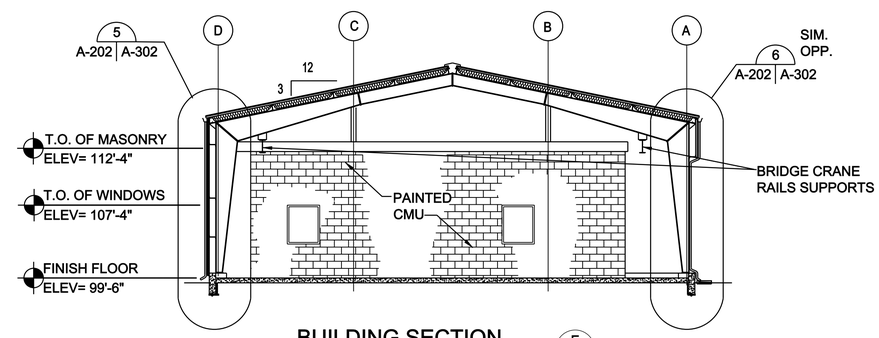

BUILDING SECTION (E) A-102 | A-202
SCALE: 1/8 INCH = 1 FOOT

GENERAL NOTES:
1. ROOF SLOPES SHOWN ARE A MINIMUM AND SHALL BE COORDINATED WITH THE INSTALLATION STANDARDS AND GEOGRAPHIC CONDITIONS AS REQUIRED TO ACCOMMODATE SNOW AND OTHER LOADING CONDITIONS.

US ARMY CORPS OF ENGINEERS
OMAHA DISTRICT

MARK	DESCRIPTION	DATE	APPR.

MARK	DESCRIPTION	DATE	APPR.

U. S. ARMY ENGINEER DISTRICT
CORPS OF ENGINEERS
OMAHA DISTRICT

DESIGNED BY: MDM | DATE: JULY 2010
DWN BY: MDM | CKD BY: CP B | SOLICITATION NO.: Y
SUBMITTED BY: CP B | CONTRACT NO.: Y
FILE NAME: 00374-202.dwg | FILE NUMBER: X
SIZE: 33.1X22 | PLOT SCALE: 0'-1" = 1" in. | PLOT DATE: 6/29/2010

DOD PRESSURIZED FUELING SYSTEM TYPE III

PUMP SHELTER
BUILDING ELEVATIONS
AND BUILDING SECTION

SHEET IDENTIFICATION NUMBER
A-202

I:\dwgs\arch\00374-202.dwg
g6edcmdm

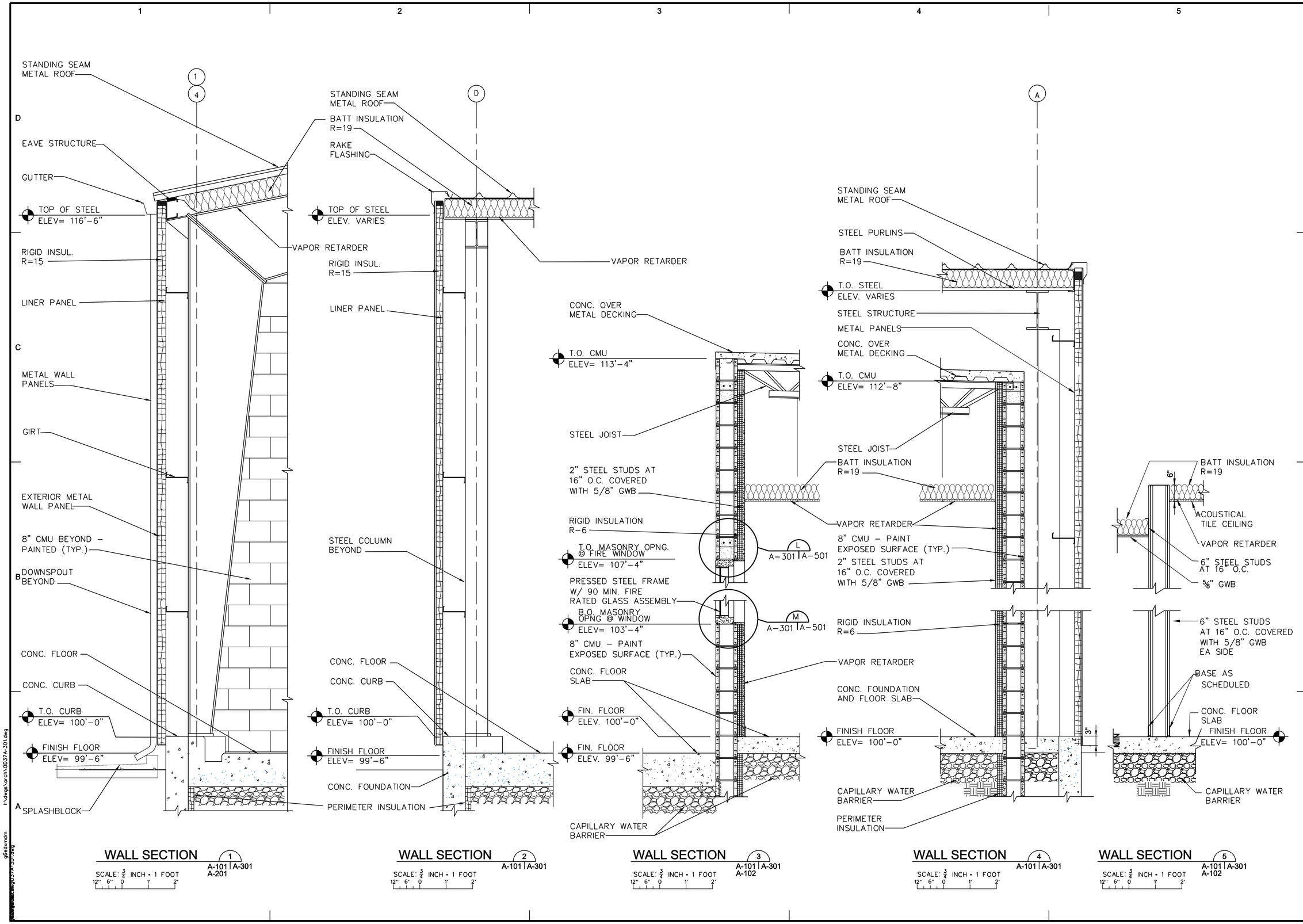

US ARMY CORPS OF ENGINEERS
OMAHA DISTRICT

MARK	DESCRIPTION	DATE	APPR.

MARK	DESCRIPTION	DATE	APPR.

U. S. ARMY ENGINEER DISTRICT
CORPS OF ENGINEERS
OMAHA DISTRICT

DESIGNED BY: MDM
DWN BY: MDM
CKD BY: CFB
SUBMITTED BY: CFB
FILE NAME: 0037A-301.dwg
SIZE: 33X22
PLOT SCALE: 0'-1" = 1" in.
DATE: JULY 2010
SOLICITATION NO.: Y
CONTRACT NO.: X
FILE NUMBER: X
PLOT DATE: 5/29/2010

DOD PRESSURIZED FUELING SYSTEM TYPE III

PUMPHOUSE
WALL SECTIONS

SHEET IDENTIFICATION NUMBER
A-301

i:\dwgs\arch\0037A-301.dwg
g6edxmdm

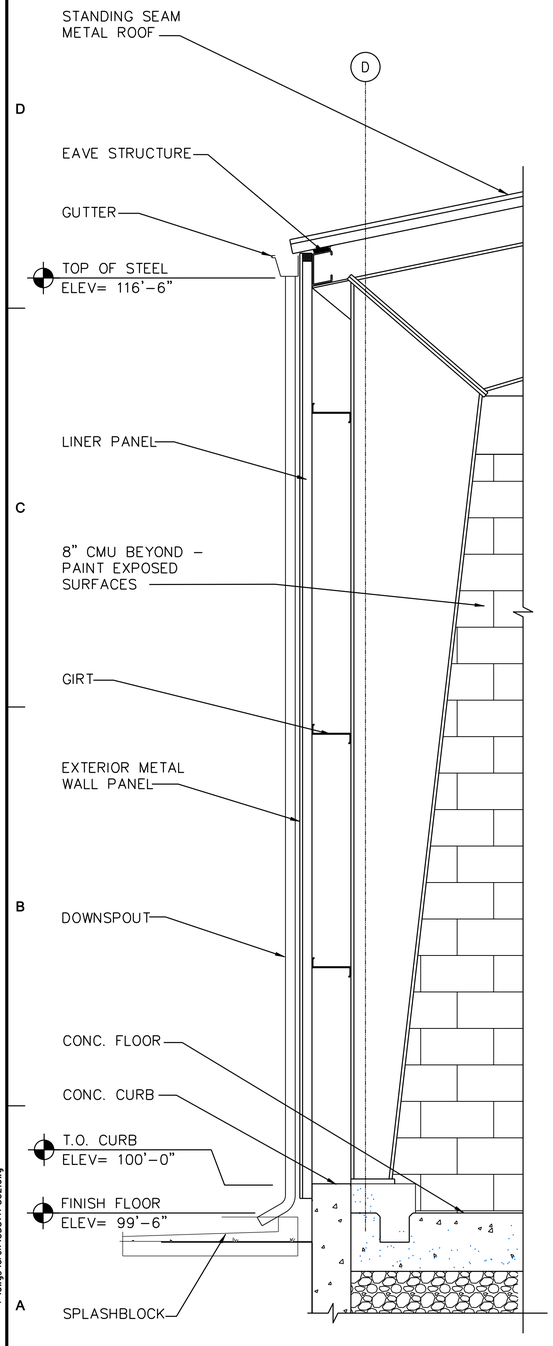

WALL SECTION 5 A-102 A-202 | A-302

SCALE: 3/4 INCH = 1 FOOT

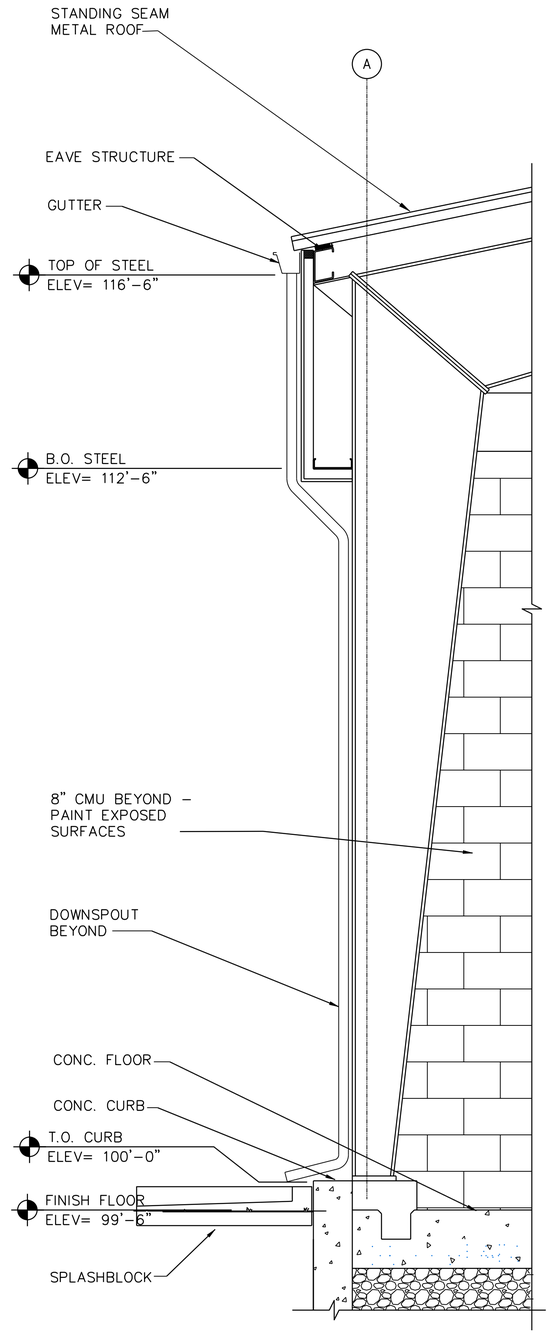

WALL SECTION 6 A-202 | A-302

SCALE: 3/4 INCH = 1 FOOT

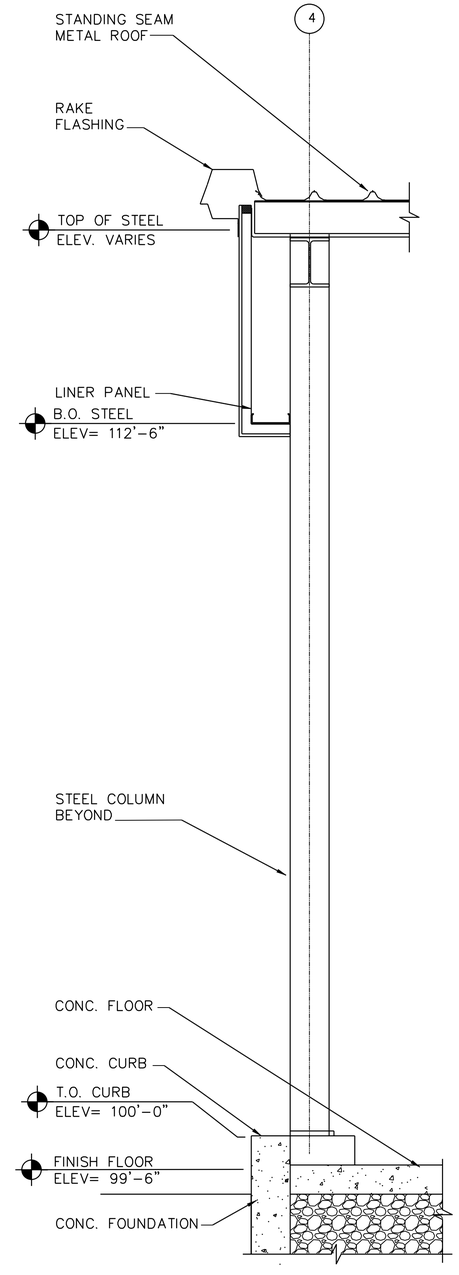

WALL SECTION 7 A-102 | A-302

SCALE: 3/4 INCH = 1 FOOT

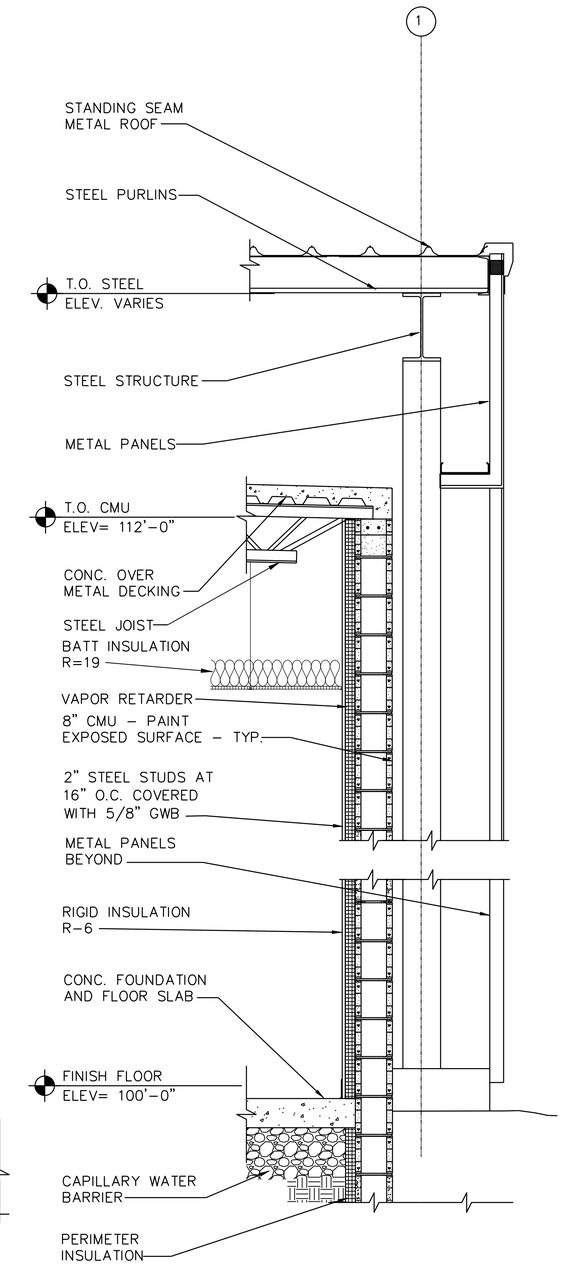

WALL SECTION 8 A-102 | A-302

SCALE: 3/4 INCH = 1 FOOT

US ARMY CORPS OF ENGINEERS
OMAHA DISTRICT

MARK	DESCRIPTION	DATE	APPR.

MARK	DESCRIPTION	DATE	APPR.

U. S. ARMY ENGINEER DISTRICT
CORPS OF ENGINEERS
OMAHA DISTRICT

DESIGNED BY: MDM | DATE: JULY 2010
DWN BY: MDM | CKD BY: GFB | SOLICITATION NO.: Y
SUBMITTED BY: GFB | CONTRACT NO.: Y
FILE NAME: 0037A-302.dwg | FILE NUMBER: X
SIZE: 33.1X22 | PLOT SCALE: 0'-1" 1" / in. | PLOT DATE: 6/29/2010

DOD PRESSURIZED FUELING SYSTEM TYPE III

PUMP SHELTER
WALL SECTIONS - OPEN PUMPHOUSE

SHEET IDENTIFICATION NUMBER
A-302

I:\dwgs\arch\0037A-302.dwg
g6edxmdm

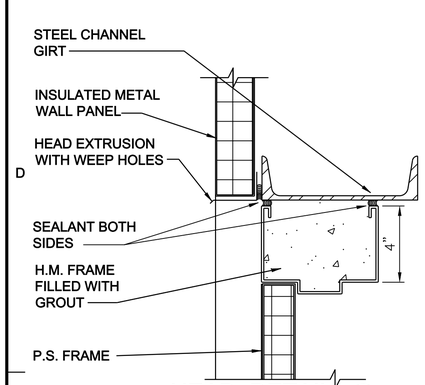

HEAD DETAIL (A) A-601|A-501

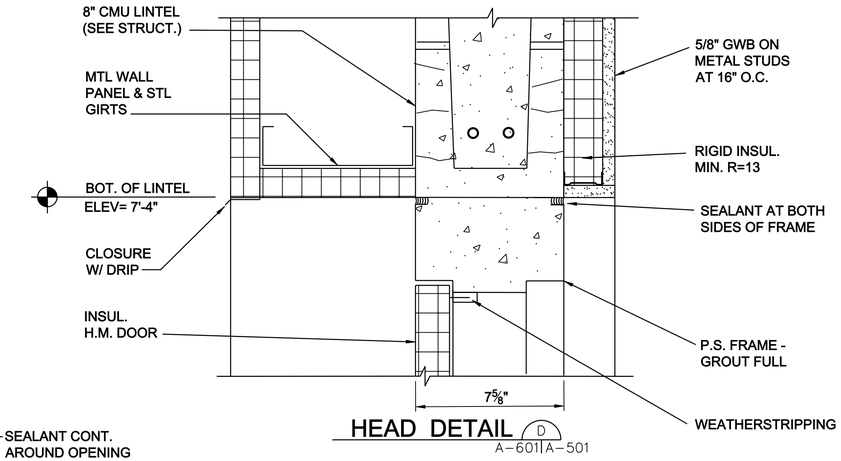

HEAD DETAIL (D) A-601|A-501

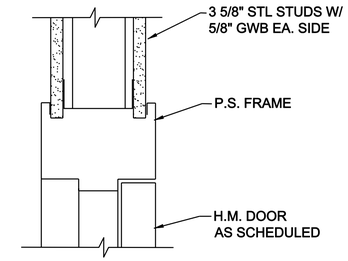

HEAD DETAIL (H) A-601|A-501

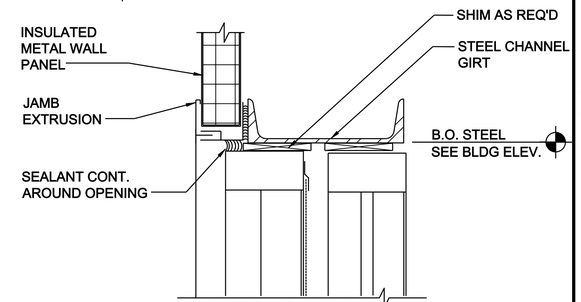

HEAD DETAIL (N) A-601|A-501

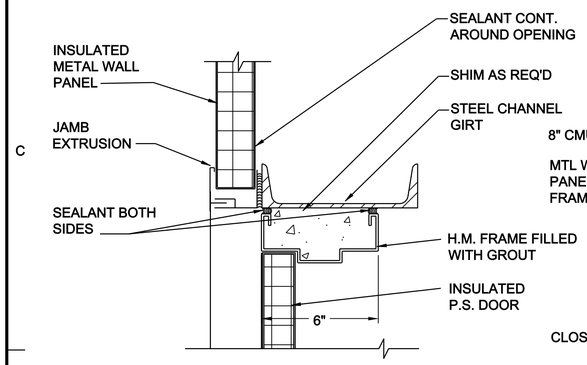

JAMB DETAIL (B) A-601|A-501

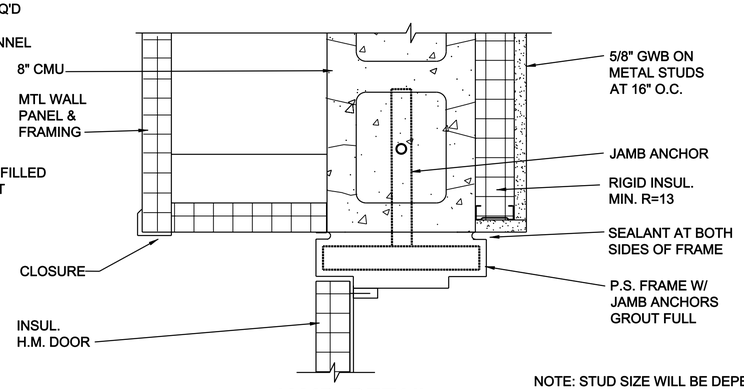

JAMB DETAIL (E) A-601|A-501

NOTE: STUD SIZE WILL BE DEPENDENT ON TYPE AND AMOUNT OF INSULATION PROVIDED MIN. W/RIGID-2" MIN. W/BATT 4" STUDS

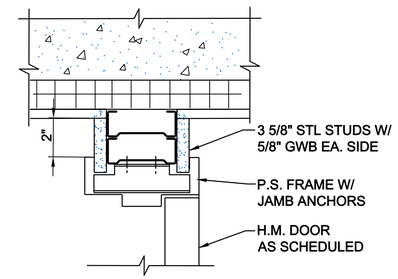

JAMB DETAIL (J) A-601|A-501

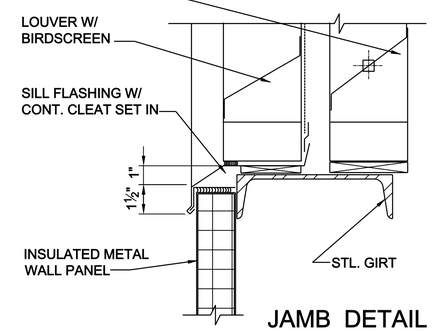

JAMB DETAIL (P) A-601|A-501

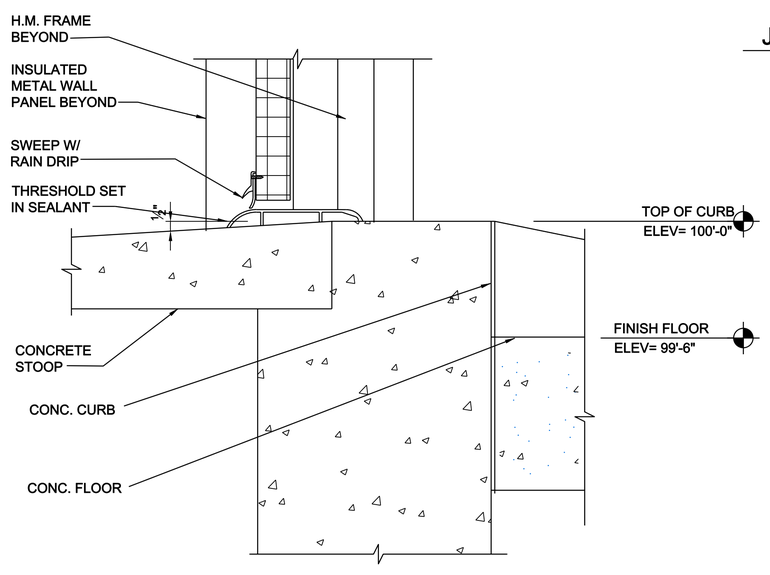

SILL DETAIL (C) A-601|A-501

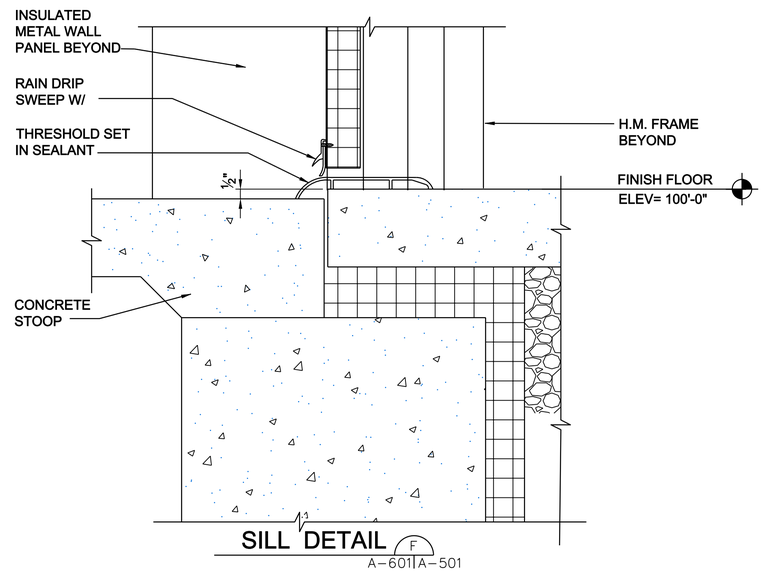

SILL DETAIL (F) A-601|A-501

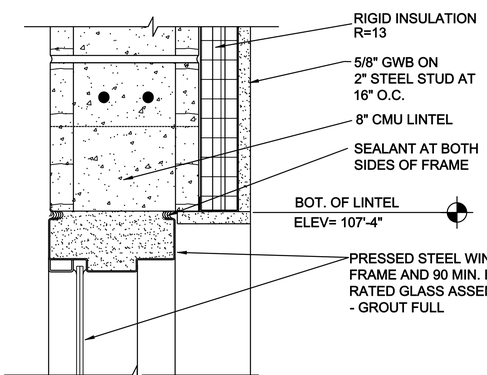

HEAD DETAIL (L) A-301|A-501 A-601

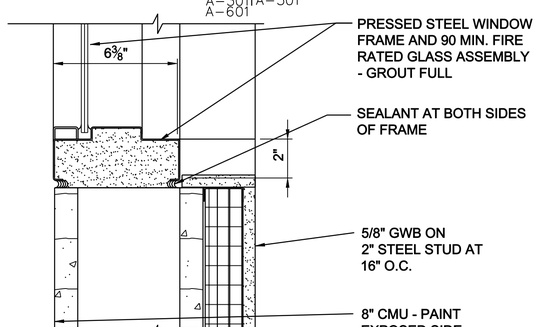

SILL DETAIL (M) A-301|A-501 A-601

SCALE: 3 INCHES = 1 FOOT
0 3" 6" 12"

US ARMY CORPS OF ENGINEERS
OMAHA DISTRICT

MARK	DESCRIPTION	DATE	APPR.

MARK	DESCRIPTION	DATE	APPR.

U. S. ARMY ENGINEER DISTRICT
CORPS OF ENGINEERS
OMAHA DISTRICT

DESIGNED BY: MDM		DATE: JULY 2010	
DWN BY: MDM	CKD BY: GFB	SOLICITATION NO.: Y	
SUBMITTED BY: GFB		CONTRACT NO.: Y	
FILE NAME: 0037A-501.dwg		FILE NUMBER: X	
SIZE: 33.1X22	PLOT SCALE: 0'-1" = 1' in.		PLOT DATE: 6/29/2010

DOD PRESSURIZED FUELING SYSTEM TYPE III

DOOR AND WINDOW DETAILS

SHEET IDENTIFICATION NUMBER
A-501

I:\dwgs\arch\0037A-501.dwg

g6edxmdm

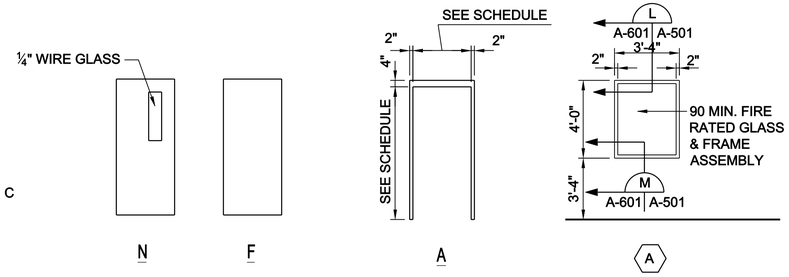

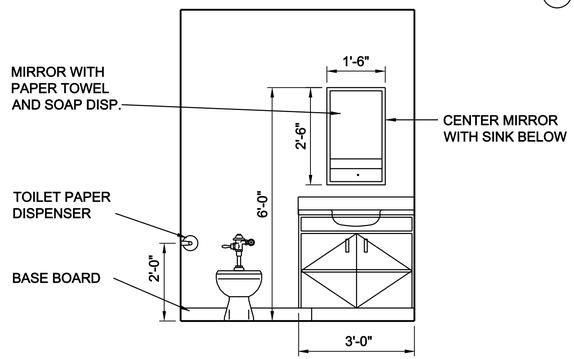

TYPICAL TOILET ELEVATION

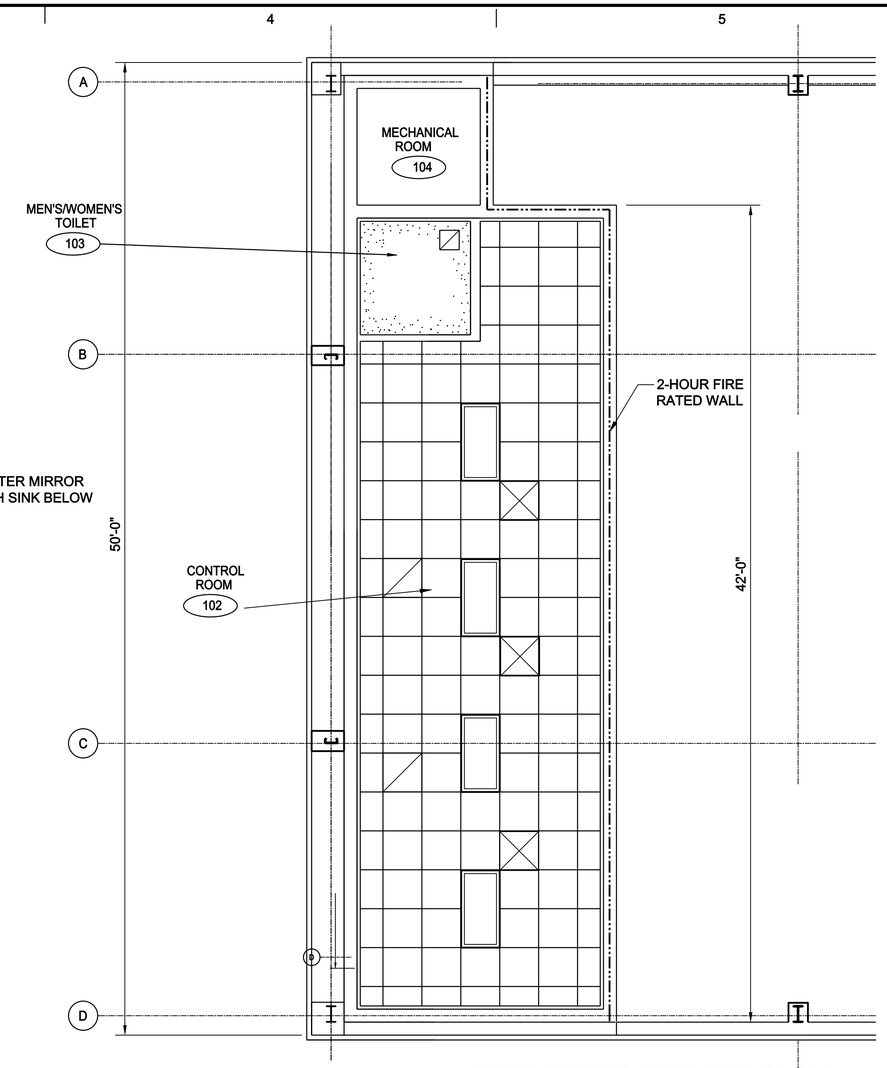

REFLECTED CEILING PLAN

NOTE
REFER TO BUILDING ELEVATIONS
TO LOCATE FULL HEIGHT EXTERIOR WALLS

ROOM FINISH SCHEDULE

ROOM NO.	ROOM NAME	FLOOR	BASE	WALLS				CEILINGS		REMARKS (SEE NOTES BELOW)
				NORTH	SOUTH	EAST	WEST	MAT.	HT.	
101	PUMP ROOM	CONC.	--	WALL PANL	WALL PANL	WALL PANL	WALL PANL	EXP.	VARIES	
102	CONTROL ROOM	VCT	RB	GWB	GWB	GWB	GWB	ACT.	9'-0"	
103	MEN/WOM TOILET	VCT	RB	GWB	GWB	GWB	GWB	GWB	8'-0"	
104	MECHANICAL ROOM	CONC.	--	CONC.	CONC.	CONC.	CONC.	EXP.	VARIES	

DOOR SCHEDULE

DOOR NO.	DOOR LOCATION	DOOR SIZE	DOOR		FRAME		DETAILS			FIRE LABEL & RATING	HDWR SET	REMARKS (SEE NOTES BELOW)
			TYPE	MAT.	TYPE	MAT.	HEAD	JAMB	SILL			
101A	PUMP ROOM 101 TO EXTERIOR	PR 3'-0" X 7'-0" X 1 3/4 "	N	HM	A	P.S.	A/A-501	B/A-501	C/A-501			
101B	PUMP ROOM 101 TO EXTERIOR	PR 3'-0" X 7'-0" X 1 3/4 "	N	HM	A	P.S.	A/A-501	B/A-501	C/A-501-SIM.			
102A	CONTROL RM. 102 TO EXTERIOR	PR 2'-10" X 7'-0" X 1 3/4 "	N	HM	A	P.S.	D/A-501	E/A-501	F/A-501			
102B	CONTROL RM. 102 TO EXTERIOR	3'-0" X 7'-0" X 1 3/4 "	N	HM	A	P.S.	D/A-501	E/A-501	F/A-501			
103	CONTROL RM. 102 TO TOILET RM. 103	3'-0" X 7'-0" X 1 3/4 "	F	HM	A	P.S.	H/A-501	J/A-501	--			
104	MECHANICAL RM. 104 TO EXTERIOR	3'-0" X 7'-0" X 1 3/4 "	N	HM	A	P.S.	D/A-501	E/A-501	F/A-501			

LEGEND:

- GYPSUM CEILING
- 2 X 2 ACOUSTICAL CEILING TILE
- 2 X 4 LIGHT FIXTURE (SEE ELECTRICAL)
- 2 HOUR FIRE WALL
- LIGHT FIXTURE (SEE ELECTRICAL)
- RECESSED LIGHT FIXTURE (SEE ELECTRICAL)
- RETURN AIR GRILL OR EXHAUST GRILL (SEE MECHANICAL)
- SUPPLY AIR DIFFUSER (SEE MECHANICAL)

DOOR NOTES:
1. DOOR HARDWARE FOR ALL EXTERIOR DOORS SHALL BE EQUIPPED WITH PANIC TYPE HARDWARE.
2. DOOR FRAMES SHALL BE WELDED TYPE JOINTS FOR ALL STEEL FRAMES.
3. DOORS 101A AND 101B SHALL BE DELETED FROM SCHEDULE FOR OPEN WALLED PUMPHOUSE.

US ARMY CORPS OF ENGINEERS
OMAHA DISTRICT

MARK	DESCRIPTION	DATE	APPR.

MARK	DESCRIPTION	DATE	APPR.

U. S. ARMY ENGINEER DISTRICT
CORPS OF ENGINEERS
OMAHA DISTRICT

DESIGNED BY: MDM | DATE: JULY 2010
DWN BY: MDM | CKD BY: CP B | SOLICITATION NO.: Y
SUBMITTED BY: CP B | CONTRACT NO.: Y
FILE NAME: OD37A-601.dwg | FILE NUMBER: X
SIZE: 33.1X22 | PLOT SCALE: 0'-1" :1" / in. | PLOT DATE: 6/29/2010

DOD PRESSURIZED FUELING SYSTEM TYPE III

ROOM FINISH & DOOR SCHEDULE, ELEVATIONS, AND REFLECTED CEILING PLAN

SHEET IDENTIFICATION NUMBER
A-601

I:\Dwgs\arch\OD37A-601.dwg
q6edxmdm