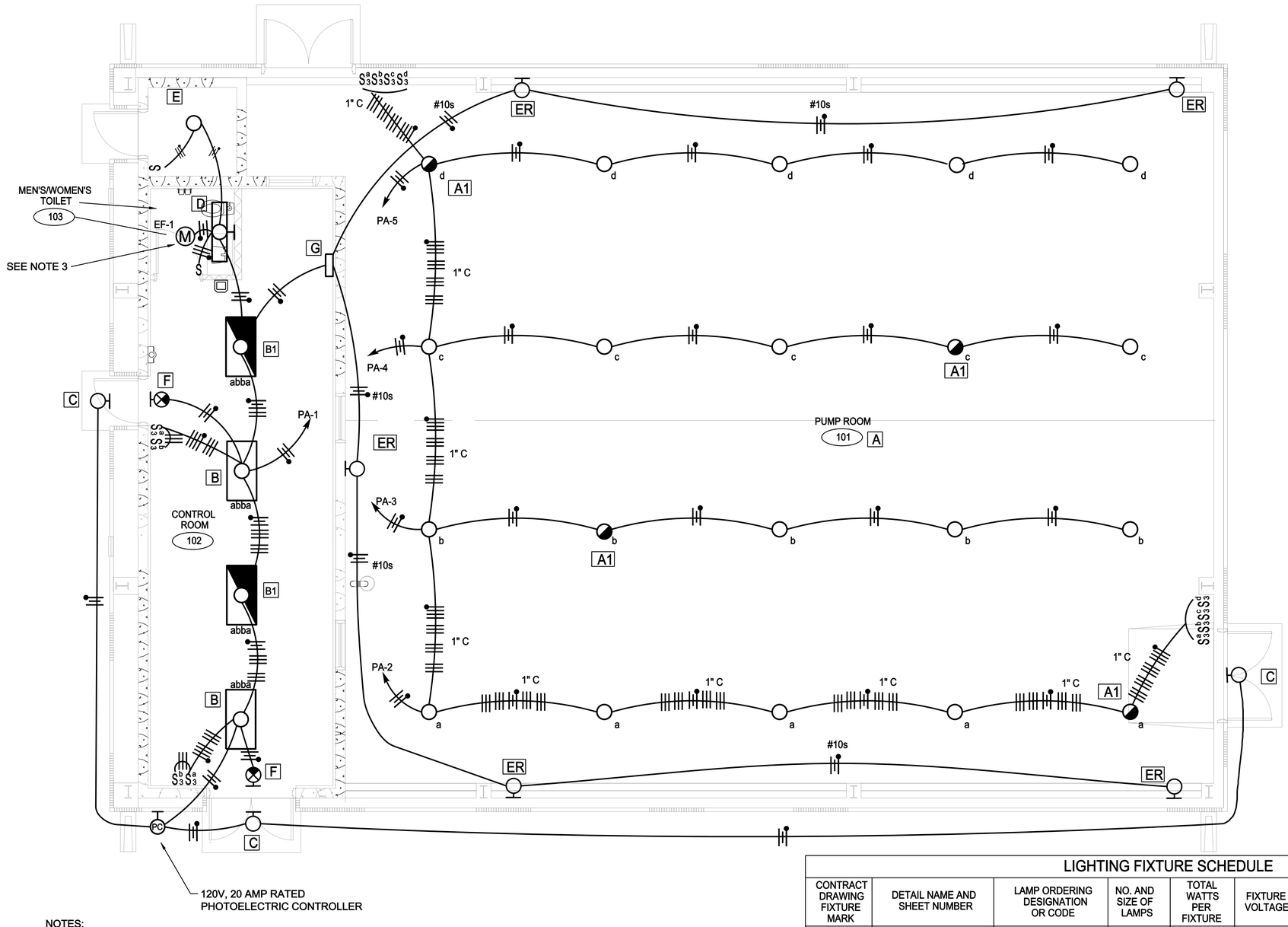

SCALE : 1/4 INCH = 1 FOOT
12" 0 5'

DESIGNER NOTES:

1. IF A PUMP SHELTER IS TO BE DESIGNED RATHER THAN A PUMPHOUSE, MOUNT EXTERIOR LIGHTS IN THE SAME GENERAL AREA, JUST HIGHER.

NOTES:

1. THE ENTIRE VOLUME UNDER THE PUMPHOUSE SHELTER EXCEPT THE VOLUME INSIDE THE CONTROL ROOM, SHALL BE CONSIDERED A CLASS 1, DIVISION 1 GROUP D (T2D-419F) HAZARDOUS LOCATION. ALL ELECTRICAL EQUIPMENT INSTALLED WITHIN THE HAZARDOUS AREA SHALL BE SPECIFICALLY APPROVED BY UL OR FACTORY MUTUAL FOR THE ABOVE HAZARDOUS AREA CLASSIFICATION.

2. EACH CONDUIT ORIGINATING IN OR PASSING THROUGH OR UNDER A HAZARDOUS AREA AND PENETRATING CONTROL ROOM WALLS, ROOF, OR FLOOR SHALL HAVE EXPLOSION PROOF SEALING FITTINGS INSTALLED IN THE INTERIOR OF THE CONTROL ROOM PER NEC 501.15.

3. CONNECT EF-1 TO THE LIGHT SWITCH.

4. CONDUIT AND CABLE SCHEDULE IS LOCATED ON SHEET EP603.

5. ALL METALLIC CONDUITS THAT ARE NOT ATTACHED TO A GROUNDED PANEL OR ENCLOSURE SHALL BE GROUNDED USING A GROUNDED BUSHING.

LIGHTING FIXTURE SCHEDULE

CONTRACT DRAWING FIXTURE MARK	DETAIL NAME AND SHEET NUMBER	LAMP ORDERING DESIGNATION OR CODE	NO. AND SIZE OF LAMPS	TOTAL WATTS PER FIXTURE	FIXTURE VOLTAGE	MOUNTING HEIGHT A.F.F.	MOUNTING STYLE	REFERENCE NOTES
A	DETAIL A EL501	METAL HALIDE	1-175	220	120	14'-3"	PENDENT	THE MOUNTING HEIGHT SHALL BE COORDINATED SO THE BRIDGE CRANE WILL PASS UNDER THE LIGHTS.
A1	DETAIL A EL501	METAL HALIDE/Q150CL	1-175/150	220/150	120	14'-3"	PENDENT	
B	DETAIL B EL501	F32T8-32W	4-32	160	120	10'-6"	RECESSED	HIGH FREQ. ELECT. BALLASTS
B1	DETAIL B EL501	F32T8-32W	4-32	160	120	10'-6"	RECESSED	WITH BATTERY BACKUP
C	DETAIL C EL501	LU100	1-100	150	120	8'-6"	WALL	MOUNT ABOVE DOOR
D	DETAIL D EL501	F32T8-32W	1-32	40	120	7'-6"	WALL	MOUNT ABOVE MIRROR
E	DETAIL E EL501	A100	1-100	100	120	8'-6"	SURFACE	
F	DETAIL F EL501	L.E.D.s	Min 100	10+/-	120	7'-6"	WALL	MOUNT ABOVE DOOR
G	DETAIL G EL501	N/A	N/A	N/A	120	8'-0"	WALL	SUSTAIN 125W FOR 90 MIN.
ER	DETAIL H EL501	25W - DC	1-25	25	12	8'-0"	WALL	MOUNT ON WALL OR COLUMN

US ARMY CORPS OF ENGINEERS
OMAHA DISTRICT

MARK	DESCRIPTION	DATE	APPR.

MARK	DESCRIPTION	DATE	APPR.

U. S. ARMY ENGINEER DISTRICT
CORPS OF ENGINEERS
OMAHA DISTRICT

DESIGNED BY: KEA | DATE: JULY 2010
DWN BY: KEA | CKD BY: SLO | SOLICITATION NO.: Y | CONTRACT NO.: Y
SUBMITTED BY: SLO | FILE NUMBER:
FILE NAME: C037EL101.dwg | PLOT SCALE: 1-0 : / in. | PLOT DATE: 6/28/2010
SIZE: 33.1X22

DOD PRESSURIZED FUELING SYSTEM TYPE III

LIGHTING PLAN

SHEET IDENTIFICATION NUMBER
EL101

I:\dwg\elec\CD37EL101.dwg
g8edx6ea

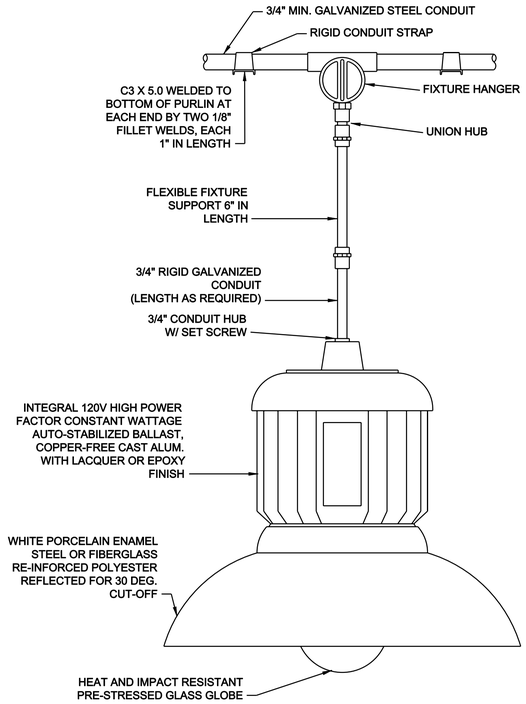

DETAIL A
FIXTURE TYPE "A" AND "A1" MOUNTING DETAIL

NO SCALE

NOTES:

1. LUMINAIRE SHALL COMPLY WITH UL 844 FOR CLASS I, DIVISION I, GROUP D (T2D-419 F) HAZARDOUS LOCATIONS.
2. ALL JOINTS SHALL BE THREADED TYPE.
3. FIXTURE SHALL HAVE INTERNAL PROVISIONS FOR GROUNDING.
4. PROVIDE WIRE GUARD OVER REFRACTOR.
5. FIXTURE "A1" SHALL HAVE AN ADDITIONAL 150W QUARTZ HOT RESTRIKE CAPABILITY.

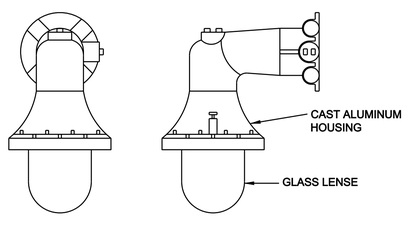

DETAIL H
FIXTURE TYPE "ER"

NO SCALE

NOTES:

1. FIXTURE SHALL COMPLY WITH UL 844 FOR CLASS 1, DIV. 1, GROUP D (T2D-419 F) HAZARDOUS LOCATION AND CONTAIN 1-25W, 12V LAMP.

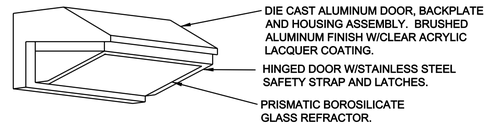

DETAIL C
FIXTURE TYPE "C"

NO SCALE

NOTES:

1. PROVIDE ANODIZED ALUMINIM REFLECTOR AND ADJUSTABLE MOGUL BASE GLAZED PORCELAN LAMPHOLDER, PREWIRED.
2. PROVIDE CAST KNOCKOUTS FOR RECESSED BOX MOUNTING.
3. FIXTURE SHALL HAVE INTERNAL PROVISIONS FOR GROUNDING.
4. FIXTURE SHALL CONFORM TO UL 1572 AND FOR WET LOCATIONS.
5. PROVIDE 120V HIGH POWER TYPE BALLAST FOR OPERATION AT AMBIENT TEMPERATURES FROM MINUS 20 DEGREES TO 105 DEGREES F.

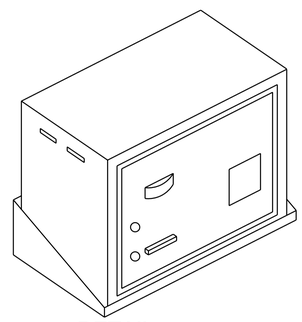

DETAIL G
FIXTURE TYPE "G"

NO SCALE

12 VOLT EMERGENCY BATTERY POWER SUPPLY UNIT

THE UNIT SHALL CONFORM TO UL 924, AND SHALL MEET OR EXCEED THE NFPA 70 TIME AND VOLTAGE REQUIREMENTS. THE UNIT SHALL BE DUAL-RATED FOR USE ON EITHER 120-VOLT OR 277-VOLT ALTERNATING CURRENT POWER SUPPLIES. FOLLOWING SUSTAINED LOSS OF THE NORMAL POWER SUPPLY, THE UNIT SHALL BE CAPABLE OF AUTOMATICALLY AND INSTANTANEOUSLY SUPPLYING AT LEAST 125 PERCENT OF THE FULL LOAD CURRENT OF THE QUANTITY AND WATTAGE RATING OF REMOTELY-MOUNTED FLOODLIGHTS INDICATED ON APPLICABLE CONTRACT DOCUMENTS. IT SHALL ALSO BE CAPABLE OF SUPPLYING 125 PERCENT OF THE FULL LOAD CURRENT OF THE FLOODLIGHTS FOR A PERIOD OF NOT LESS THAN 90 MINUTES, AND UNTIL THE BATTERY HAS BEEN DISCHARGED TO 87.5 PERCENT OF THE NOMINAL VOLTAGE RATING OF THE FLOODLIGHTS. A BATTERY LOW-VOLTAGE CUTOUT OR DISCONNECT FEATURE SHALL BE INCORPORATED INTO THE UNIT TO PROTECT THE BATTERY AGAINST DAMAGE IF THE BATTERY VOLTAGE DROPS BELOW 87.5 PERCENT OF THE NOMINAL VOLTAGE RATING OF THE BATTERY FLOODLIGHTS INDICATED ON APPLICABLE CONTRACT DOCUMENTS. THE BATTERY SHALL BE THE SEALED MAINTENANCE-FREE TYPE DESIGNED FOR 10 YEARS OF MAINTENANCE-FREE SERVICE, AND SHALL BE PROVIDED WITH HYDROMETER INDICATORS IF OF THE LEAD-CALCIUM TYPE CONTAINING A SULFURIC ACID ELECTROLYTE. THE BATTERY CHARGER SHALL BE CAPABLE OF FULLY RECHARGING THE BATTERY WITHIN 12 HOURS AFTER DISCHARGE TO 87.5 PERCENT OF THE NOMINAL BATTERY VOLTAGE. THE BATTERY CHARGER SHALL BE THE SOLID-STATE TYPE, AND SHALL PROVIDE A CONTINUOUS, VARIABLE, CURRENT-LIMITED, FILTERED AND REGULATED CHARGE RATE. BATTERY AND CHARGER SHALL BE CONTAINED IN A STEEL CABINET NOT LESS THAN 18 GUAGE IN THICKNESS WITH AN ENAMEL FINISH, UNLESS OTHERWISE APPROVED, AND SHALL HAVE AN ELECTROLYTE-RESISTANT UNDERCOAT IF A CORROSIVE ELECTROLYTE IS HOUSED IN THE BATTERY CASE. MOUNTING BRACKETS OR A MOUNTING SHELF SHALL BE PROVIDED FOR THE CABINET, COMPLETE WITH MOUNTING HARDWARE FINISHED TO MATCH THE CABINET. MOUNTING SLOTS FOR WALL OR SHELF MOUNTING SHALL BE PROVIDED, AS INDICATED ON APPLICABLE CONTRACT DOCUMENTS. THE CABINET SHALL HAVE SEPARATE BATTERY AND BATTERY-CHARGER COMPARTMENTS TO FACILITATE REMOVAL AND REPLACEMENT OF THOSE COMPONENTS, A HINGED ACCESS DOOR, AND PROVISIONS FOR TERMINATING AC AND DC CONDUCTORS AND CONDUITS. A LOAD RELAY WITH 30-AMPERE CONTACTS SHALL BE PROVIDED IN ADDITION TO THE NUMBER OF 10-20 AMPERE DISTRIBUTION CIRCUITS AS NECESSARY TO SUPPLY 125 PERCENT OF THE LOAD DEMANDS OF THE QUANTITY AND RATING OF THE REMOTELY-MOUNTED FLOODLIGHTS. THE UNIT SHALL BE PREWIRED AND SHALL BE EQUIPPED WITH A CHARGE-INDICATOR LIGHT, AND A PUSH-TO-TEST SWITCH AND SUITABLE METER TO INDICATE THE BATTERY VOLTAGE WHEN THE SWITCH IS CLOSED.

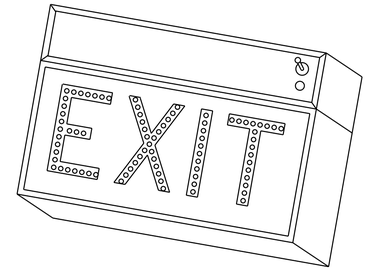

DETAIL F
FIXTURE TYPE "F"

NO SCALE

NOTES:

1. FIXTURE SHALL CONFORM TO UL 924 & NFPA 101.
2. HOUSING SHALL BE ALUMINUM OR STEEL.
3. FIXTURE SHALL HAVE MIN. OF 100 LIGHT EMITTING DIODES.
4. FACE PANEL SHALL BE MOLDED POLYCARBONATE PLASTIC OR GLASS, SHALL BE OF THE WHITE DIFFUSING TYPE SIMILAR TO OPAL OR ALBALITE, AND SHALL HAVE 6 INCH GREEN LETTERS WITH 3/4 INCH STROKE.
5. FIXTURE SHALL BE WALL MOUNTED.
6. FIXTURE SHALL HAVE AN AUTOMATIC SOLID STATE CHARGER AND A SEALED, RECHARGEABLE, MAINTENANCE FREE LEAD OXIDE OR NICKEL CADMIUM BATTERY. FIXTURE SHALL HAVE A LIGHT EMITTING DIODE PILOT LIGHT TO SHOW THAT THE BATTERY CHARGER IS FUNCTIONING. A TEST SWITCH TO SIMULATE A POWER FAILURE AND ALLOW CHECKING OF EMERGENCY BATTERY SYSTEM SHALL BE PROVIDED.
7. FIXTURE SHALL BE PREWIRED.

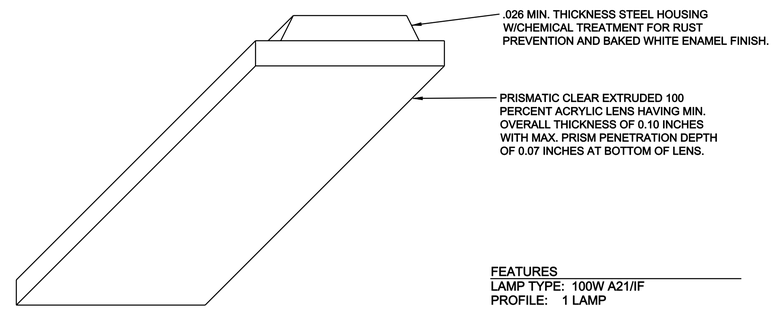

DETAIL B
FIXTURE TYPE "B" & "B1"

NO SCALE

NOTES:

1. ENTIRE HOUSING SHALL BE PAINTED WHITE. HOUSING SHALL NOT PERMANENTLY DEFORM NOR SHALL IT DEFLECT MORE THAN 1" WHEN LIFTED BY ONE CORNER.
2. HOUSING ENDS SHALL BE SECURED BY RIVETS OR SCREWS. PROVIDE A KNOCKOUT IN EACH END AND TWO IN THE TOP OF HOUSING.
3. THE FIXTURE SHALL BE RECESSED TYPE.
4. BALLAST SHALL BE UL LISTED, CLASS P, WITH SOUND RATING OF "A".
5. FIXTURE SHALL HAVE INTERNAL PROVISIONS FOR GROUNDING.
6. FIXTURE B1 IS THE SAME AS B EXCEPT THAT IT INCLUDES BATTERY BACKUP.

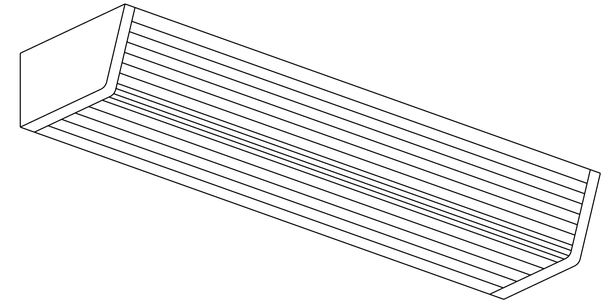

DETAIL D
FIXTURE TYPE "D"

NO SCALE

NOTES:

1. FIXTURE SHALL CONFORM TO UL 1570.
2. HOUSING SHALL BE OF DIE FORMED COLD ROLLED STEEL HAVING A MONIMAL THICKNESS OF NOT LESS THAN 0.030 INCH. THE BACK HOUSING SHALL BE ONE PIECE, SOLID ALONG ITS ENTIRE LENGTH. END PLATES SHALL BE DIE FORMED STEEL AND SHALL BE FASTENED SECURELY TO THE HOUSING IN A MANNER THAT PERMITS NO LIGHT LEAKAGE.
3. ALL METAL PARTS SHALL RECEIVE A RUST INHIBITIVE COATING AND A BAKED WHITE ENAMEL FINISH COAT.
4. LENS SHALL BE PRISMATIC, ONE PIECE, 0.125 INCH NOMINAL THICKNESS, AND 100 PERCENT VIRGIN ACRYLIC. LENS SHALL BE ATTACHED TO THE HOUSING SO THERE IS NO LIGHT LEAKAGE. LENS SHALL BE HELD IN PLACE BY CONCEALED HINGES, BY REINFORCING RIBS ALONG THE EDGES, OR BY RESTING ON THE END PLATES.
5. FIXTURE SHALL BE PREWIRED.

FEATURES
LAMP TYPE: 100W A21/IF
PROFILE: 1 LAMP

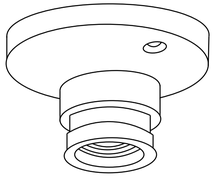

NOM. DIMENSIONS 102 mm X 60 mm
(4" DIA. X 2□" D)

GENERAL DESCRIPTION
HOUSING: PORCELAIN SOCKET LAMP HOLDER WITH MEDIUM BASE SOCKET

ELECTRICAL: 120 VOLT

FINISH: WHITE

DETAIL E
FIXTURE TYPE "E"

NO SCALE

US ARMY CORPS OF ENGINEERS
OMAHA DISTRICT

MARK	DESCRIPTION	DATE	APPR.

MARK	DESCRIPTION	DATE	APPR.

U. S. ARMY ENGINEER DISTRICT
CORPS OF ENGINEERS
OMAHA DISTRICT

DESIGNED BY: KEA | DATE: JULY 2010
DWN BY: KEA | CKD BY: SLO | SOLICITATION NO.: Y
SUBMITTED BY: | CONTRACT NO.: Y
FILE NAME: OD57EL501.dwg | FILE NUMBER: X
SIZE: 33.1X22 | PLOT SCALE: 1 / 1 in. | PLOT DATE: 6/28/2010

DOD PRESSURIZED FUELING SYSTEM TYPE III

LIGHTING FIXTURE DETAILS

SHEET IDENTIFICATION NUMBER
EL501

DESIGNER NOTES:

1. IF A PUMP SHELTER IS TO BE DESIGNED RATHER THAN A PUMPHOUSE, DELETE THE PUMPROOM EXHAUST FAN.

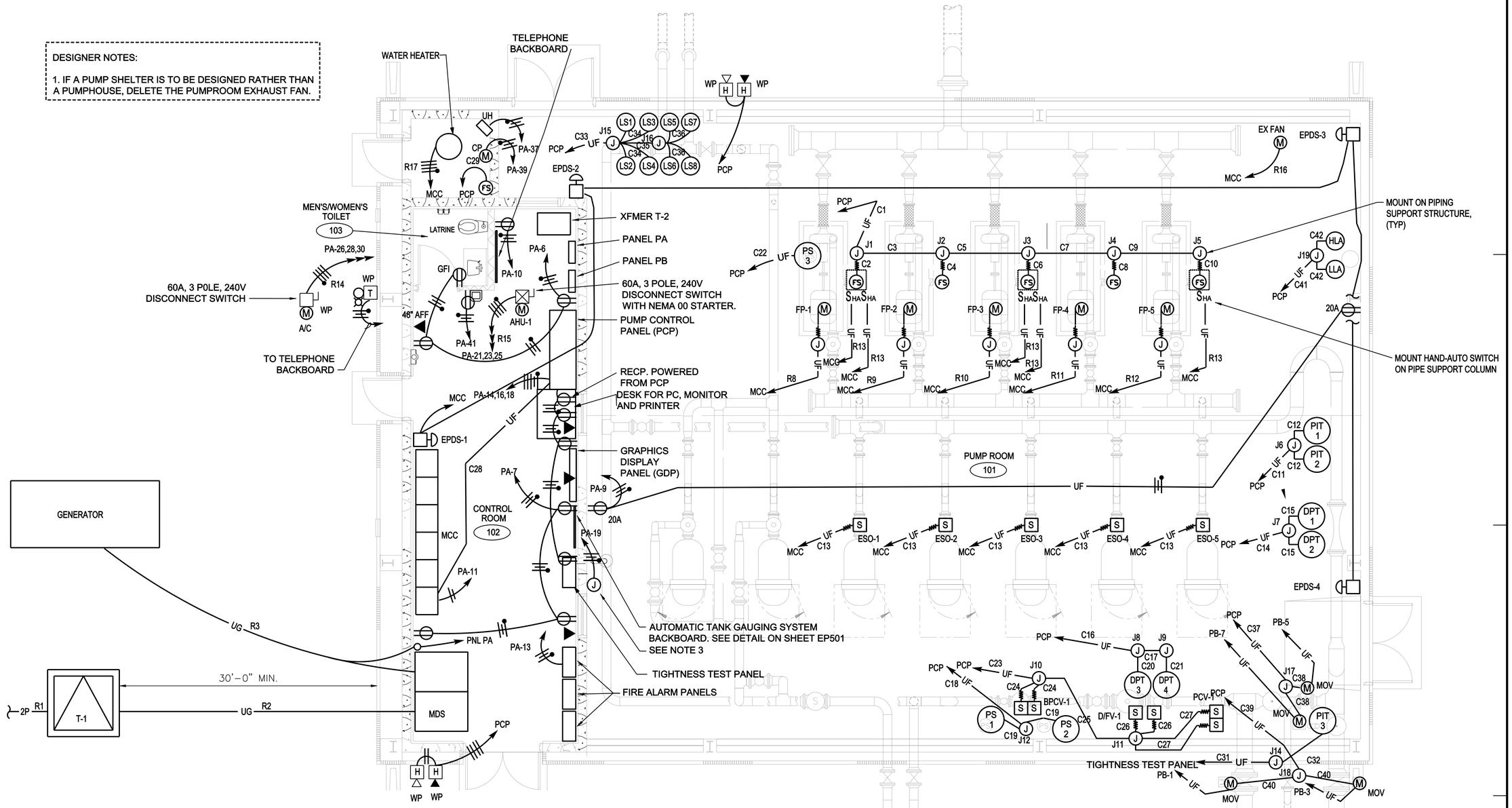

SUPPLEMENTAL LEGEND:

- VIBRATING HORN, 100dB AT 10 FEET
- RESONATING HORN, 100 dB AT 10 FEET WITH SOUND DISTINCT FROM VIBRATING HORN.
- JUMBO MUSHROOM PUSHBUTTION STATION, 1-NC MOMENTARY CONTACT, MOUNT AT 6' AFF.
- PIT 1 — PRESSURE INDICATING TRANSMITTER
- DPT 1 — DIFFERENTIAL PRESSURE TRANSMITTER
- PS 1 — PRESSURE SENSOR
- S — SOLENOID OPERATOR ON VALVE
- FLEXIBLE CONDUIT
- J — JUNCTION BOX OR CONDULET PER N.E.C.
- R1, C1, J1 — POWER, CONTROL, JUNCTION BOX LABELS PER CONDUIT AND CABLE SCHEDULES ON SHEET EP603
- T — TELEPHONE SYSTEM BELL/STROBE LIGHT
- S HA — KEYED HAND-AUTO SELECTOR SWITCH AND RUN LIGHT. SEE NOTE 7.
- EPDS — EMERGENCY POWER DOWN STATION
- FS — FLOW SWITCH

NOTES;

1. THE ENTIRE VOLUME UNDER THE PUMPHOUSE SHELTER EXCEPT THE VOLUME INSIDE THE CONTROL ROOM, SHALL BE CONSIDERED A CLASS 1, DIVISION 1 GROUP D (T2D-419F) HAZARDOUS LOCATION. ALL ELECTRICAL EQUIPMENT INSTALLED WITHIN THE HAZARDOUS AREA SHALL BE SPECIFICALLY APPROVED BY UL OR FACTORY MUTUAL FOR THE ABOVE HAZARDOUS AREA CLASSIFICATION.

2. EACH CONDUIT ORIGINATING IN OR PASSING THROUGH OR UNDER A HAZARDOUS AREA AND PENETRATING CONTROL ROOM WALLS, ROOF, OR FLOOR SHALL HAVE EXPLOSION PROOF SEALING FITTINGS INSTALLED IN THE INTERIOR OF THE CONTROL ROOM PER NEC 501.15.

3. CONNECTION FOR EYE WASH/SHOWER AND HOSE BIB HEAT TAPE. 500 WATTS WITH INTEGRAL THERMOSTAT.

4. A MEANS SHALL BE PROVIDED FOR THE FUTURE REMOVAL OF EQUIPMENT WITHOUT THE TURNING OR REMOVAL OF CONDUIT IN HAZARDOUS LOCATIONS. THIS MAY BE ACCOMPLISHED BY THE INSTALLATION OF AN APPROPRIATE EXPLOSION PROOF UNION AT OR NEAR THE CONDUIT ENTRANCE TO THE ENCLOSURE. UNION SHALL BE RATED FOR THE HAZARDOUS CLASSIFICATION LISTED ABOVE.

5. CONDUIT AND CABLE SCHEDULE IS LOCATED ON SHEET EP603.

6. ALL METALLIC CONDUITS THAT ARE NOT ATTACHED TO A GROUNDED PANEL OR ENCLOSURE SHALL BE GROUNDED USING A GROUNDED BUSHING.

7. KEYED HAND-AUTO SWITCH WILL BE KEYED ALIKE WITH THE CORRESPONDING KEYED HOA SWITCH IN THE MCC. SEE SHEET EP602.

US ARMY CORPS OF ENGINEERS
OMAHA DISTRICT

MARK	DESCRIPTION	DATE	APPR.

MARK	DESCRIPTION	DATE	APPR.

U. S. ARMY ENGINEER DISTRICT
CORPS OF ENGINEERS
OMAHA DISTRICT

DESIGNED BY: KEA | DATE: JULY 2010
DWN BY: KEA | CKD BY: SLO | SOLICITATION NO.: T
SUBMITTED BY: SLO | CONTRACT NO.:
FILE NAME: OD37EP101.dwg | FILE NUMBER:
SIZE: 33.1X22 | PLOT SCALE: 1 / in. | PLOT DATE: 6/30/2010

DOD PRESSURIZED FUELING SYSTEM TYPE III

POWER PLAN

SHEET IDENTIFICATION NUMBER
EP101

I:\dwgs\elec\OD37EP101.dwg
gbedckes

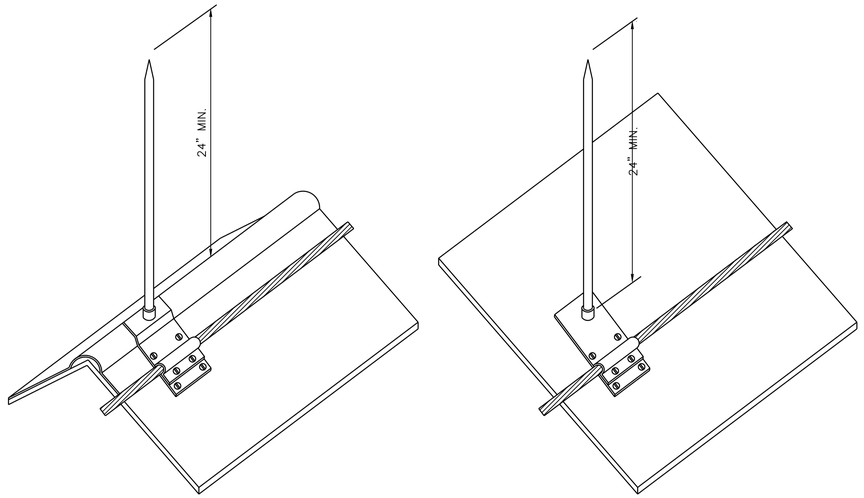

LIGHTNING PROTECTION POINT SLOPED MOUNTING DETAIL (1)

NO SCALE

EG101 | EP501

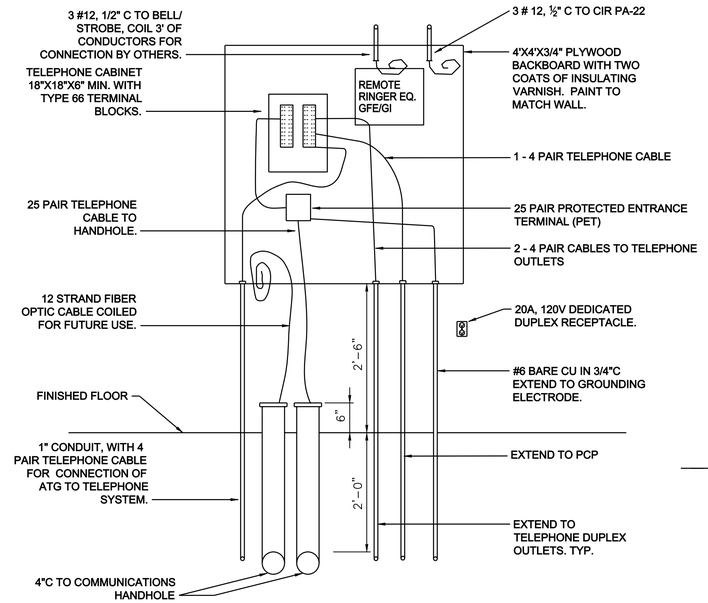

TELEPHONE BACKBOARD ELEVATION

NO SCALE

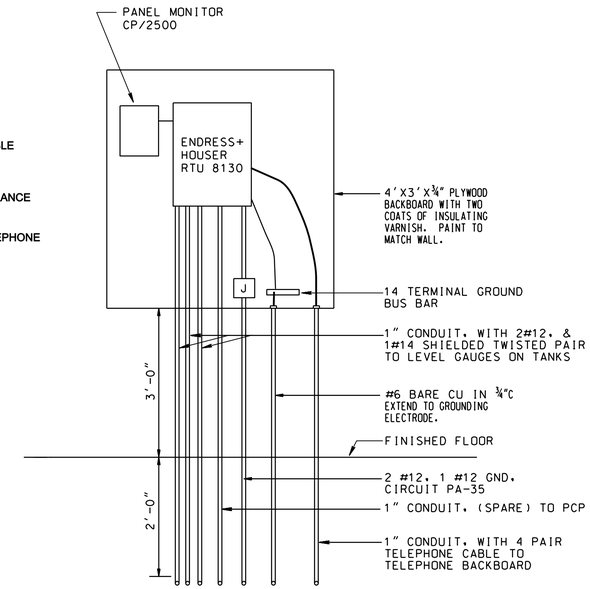

THE RTU AND PANEL MONITOR ARE PROVIDED BY SPEC SECT. 33 52 43.11. ALL CONDUIT FOR ATG SYSTEM SHALL BE RIGID STEEL, (GALVANIZED ABOVEGROUND AND PVC COATED UNDERGROUND). THE ATG SYSTEM SHALL BE ENRAF 854 TYPE.

AUTOMATIC TANK GAUGING SYSTEM BACKBOARD ELEVATION

NO SCALE

NOTES TO DESIGNER

1. IF ANOTHER TYPE OF ATG SYSTEM IS TO BE USED INSTEAD OF THE ENRAF TYPE, THE ABOVE DETAIL SHOULD BE MODIFIED TO SHOW THE APPROPRIATE REQUIREMENTS FOR THAT TYPE OF ATG SYSTEM.

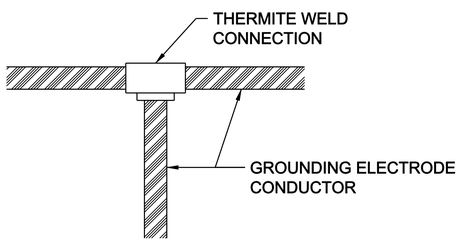

CABLE-TO-CABLE GROUNDING CONNECTION DETAIL (2)

NO SCALE

EG101 | EP501

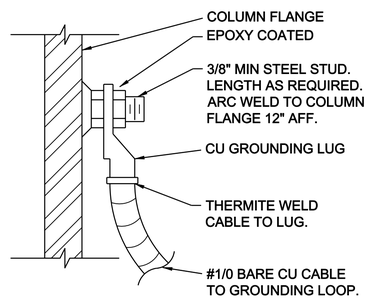

STEEL COLUMN GROUNDING DETAIL (4)

NO SCALE

EG101 | EP501

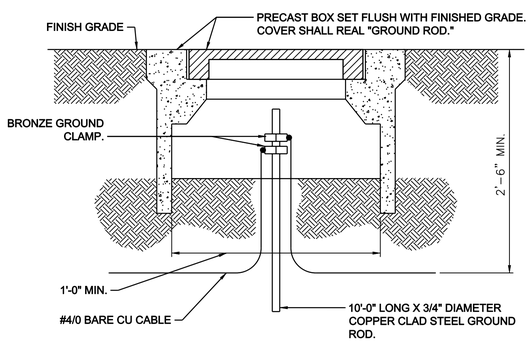

GROUND ROD BOX DETAIL (3)

NO SCALE

EG101 | EP501

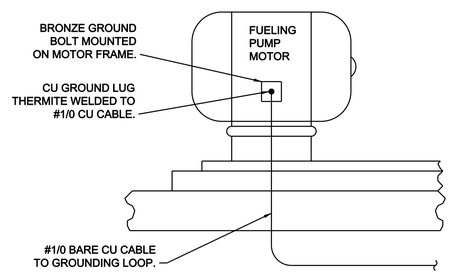

FUELING PUMP MOTOR GROUNDING DETAIL (5)

NO SCALE

EG101 | EP501

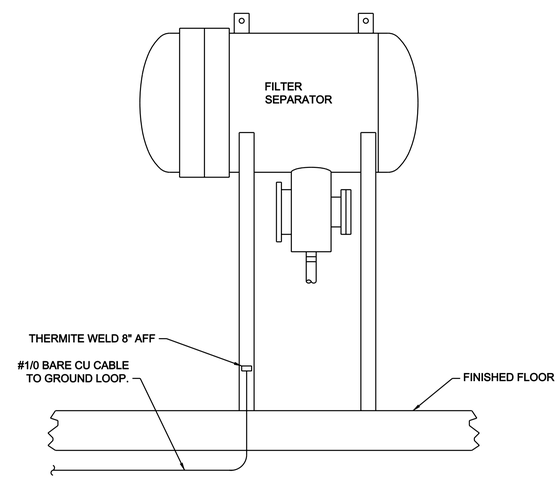

FILTER SEPARATOR GROUNDING DETAIL (6)

NO SCALE

EG101 | EP501

US ARMY CORPS OF ENGINEERS
OMAHA DISTRICT

MARK	DESCRIPTION	DATE	APPR.

MARK	DESCRIPTION	DATE	APPR.

U. S. ARMY ENGINEER DISTRICT
CORPS OF ENGINEERS
OMAHA DISTRICT

DESIGNED BY: KEA | DATE: JULY 2010
DWN BY: KEA | CKD BY: SLO | SOLICITATION NO.: Y
SUBMITTED BY: SLO | CONTRACT NO.:
FILE NAME: OD37EP501.dwg | FILE NUMBER:
SIZE: 33.1X22 | PLOT SCALE: 1 / in. | PLOT DATE: 6/28/2010

DOD PRESSURIZED FUELING SYSTEM TYPE III

ELECTRICAL DETAILS

SHEET IDENTIFICATION NUMBER
EP501

I:\dwgs\elec\OD37EP501.dwg
gbedckea

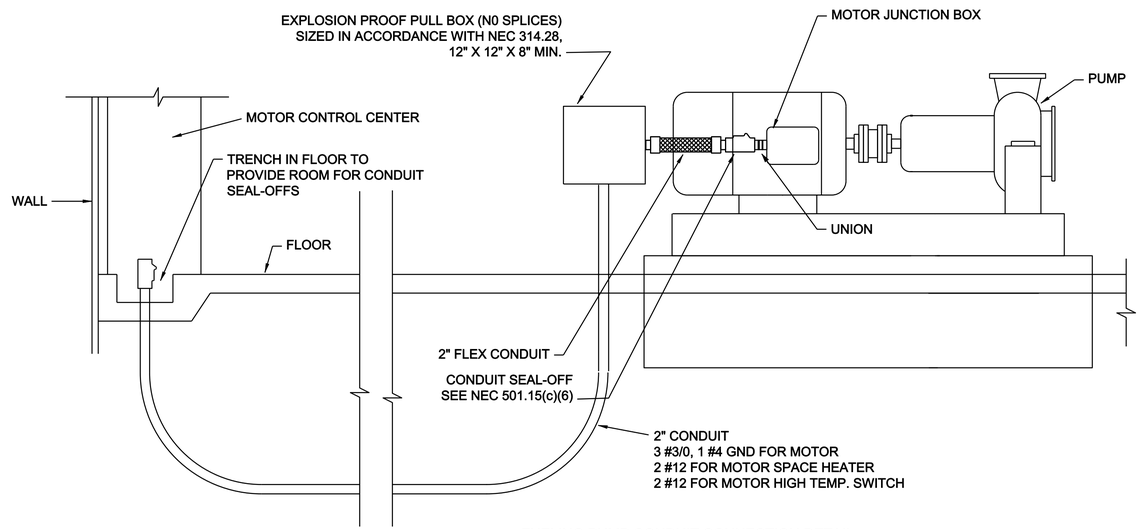

FUELING PUMP CONDUIT CONNECTION DETAIL

NO SCALE

US ARMY CORPS
OF ENGINEERS
OMAHA DISTRICT

MARK	DESCRIPTION	DATE	APPR.

MARK	DESCRIPTION	DATE	APPR.

U. S. ARMY ENGINEER DISTRICT
CORPS OF ENGINEERS
OMAHA DISTRICT

DESIGNED BY: KEA
DWN BY: KEA
CKD BY: SLO
SUBMITTED BY: SLO
DATE: JULY 2010
SOLICITATION NO.: Y
CONTRACT NO.:
FILE NUMBER:
FILE NAME: CD3TEP502.dwg
SIZE: 33.1X22
PLOT SCALE: 1 / 1in.
PLOT DATE: 6/28/2010

DOD PRESSURIZED FUELING SYSTEM TYPE III

ELECTRICAL DETAILS

SHEET
IDENTIFICATION
NUMBER
EP502

I:\dwg\elec\CD3TEP502.dwg

g9ed06ea

MOTOR CONTROL CENTER (MCC) 480V, 3 PHASE, 3 WIRE, 800A MAIN BUS, 400A GROUND BUS, 22,000 AIC SYMETRICAL

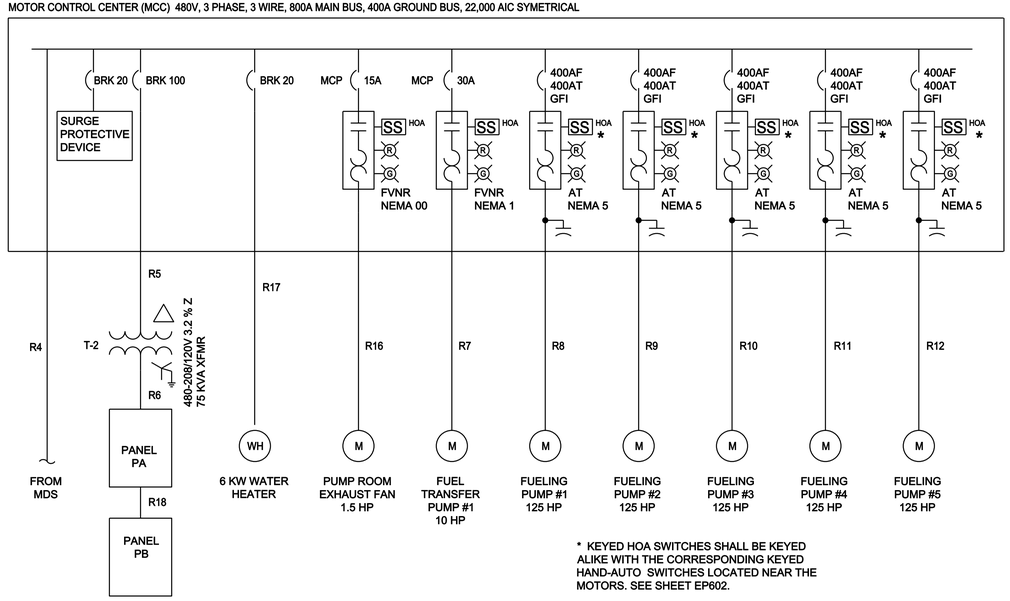

* KEYED HOA SWITCHES SHALL BE KEYED ALIKE WITH THE CORRESPONDING KEYED HAND-AUTO SWITCHES LOCATED NEAR THE MOTORS. SEE SHEET EP602.

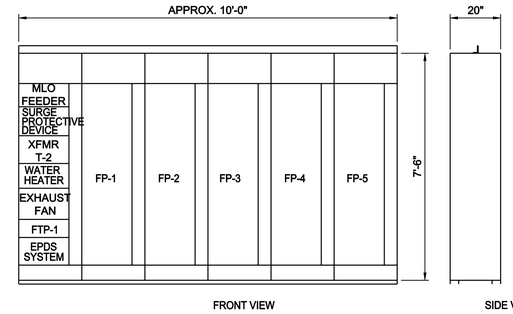

MOTOR CONTROL CENTER (MCC) ELEVATION

NO SCALE

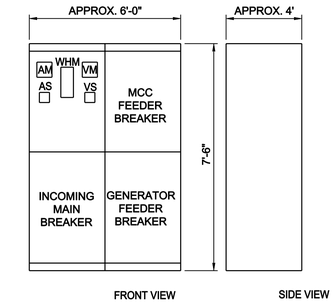

MAIN DISTRIBUTION SWITCHBOARD (MDS)

NO SCALE

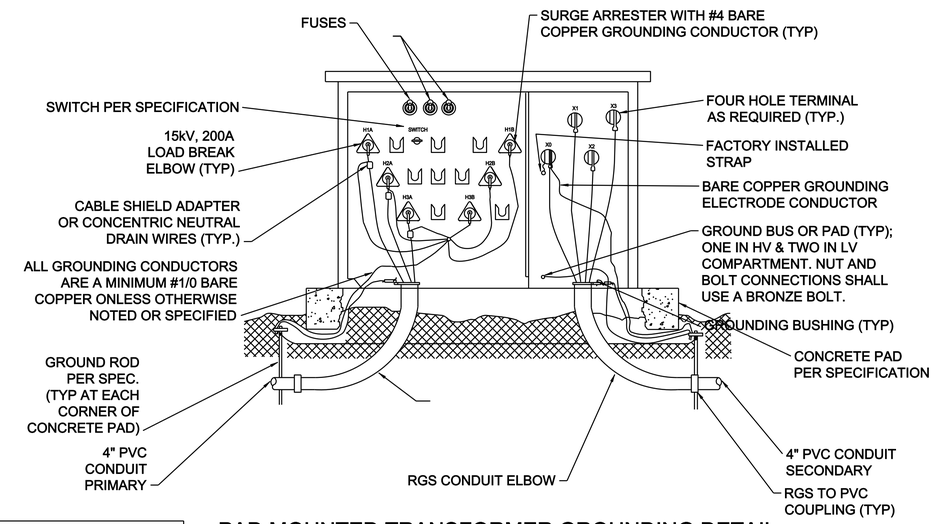

PAD MOUNTED TRANSFORMER GROUNDING DETAIL

NO SCALE

LOOP FEED, DEAD FRONT, DELTA - GROUNDED WYE TRANSFORMER

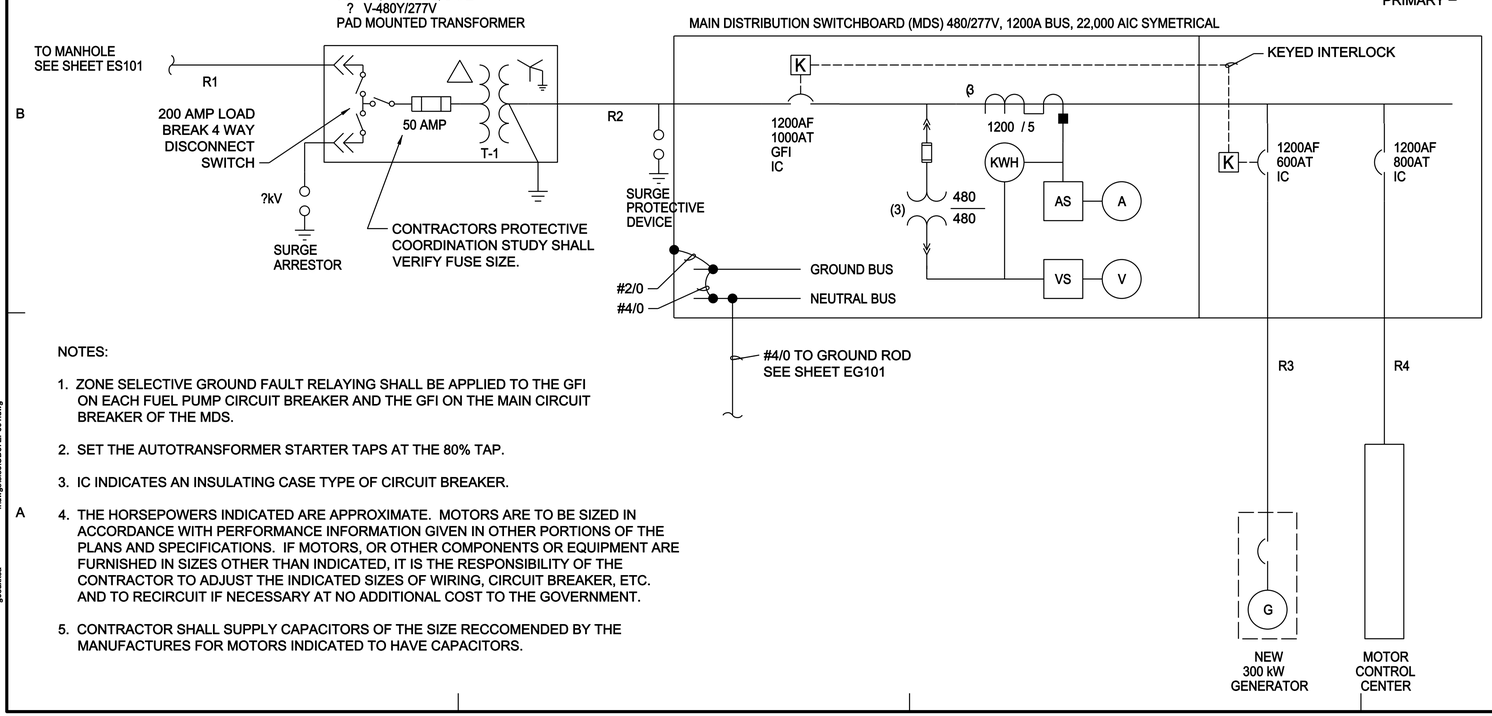

NOTES:

1. ZONE SELECTIVE GROUND FAULT RELAYING SHALL BE APPLIED TO THE GFI ON EACH FUEL PUMP CIRCUIT BREAKER AND THE GFI ON THE MAIN CIRCUIT BREAKER OF THE MDS.
2. SET THE AUTOTRANSFORMER STARTER TAPS AT THE 80% TAP.
3. IC INDICATES AN INSULATING CASE TYPE OF CIRCUIT BREAKER.
4. THE HORSEPOWERS INDICATED ARE APPROXIMATE. MOTORS ARE TO BE SIZED IN ACCORDANCE WITH PERFORMANCE INFORMATION GIVEN IN OTHER PORTIONS OF THE PLANS AND SPECIFICATIONS. IF MOTORS, OR OTHER COMPONENTS OR EQUIPMENT ARE FURNISHED IN SIZES OTHER THAN INDICATED, IT IS THE RESPONSIBILITY OF THE CONTRACTOR TO ADJUST THE INDICATED SIZES OF WIRING, CIRCUIT BREAKER, ETC. AND TO RECIRCUIT IF NECESSARY AT NO ADDITIONAL COST TO THE GOVERNMENT.
5. CONTRACTOR SHALL SUPPLY CAPACITORS OF THE SIZE RECCOMENDED BY THE MANUFACTURES FOR MOTORS INDICATED TO HAVE CAPACITORS.

NOTES:

1. SEE CONDUIT AND CABLE SCHEDULES ON SHEET EP603.
2. EPDS SYSTEM SHALL BE AS DETAILED ON SHEET EP604.

NOTES TO DESIGNER:

1. TRANSFORMERS, SWITCHGEAR, MOTOR CONTROL CENTER, FUSES, CIRCUIT BREAKERS, AND CONDUCTORS SHALL HAVE RATINGS APPROPRIATE FOR THE ACTUAL LOADS AND FOR THE CHARACTERISTICS OF THE PRIMARY SERVICE. SWITCHGEAR, MOTOR CONTROL CENTER, AND BREAKERS SHALL HAVE SHORT CIRCUIT RATINGS BASED ON ACTUAL LOADS, AVAILABLE SHORT CIRCUIT CURRENT, AND EQUIPMENT RATINGS.
2. ENGINE GENERATOR SIZE SHALL BE BASED ON THE ABILITY TO START ONE PUMP WITH NO MORE THAN A 20% VOLTAGE DIP WITH A 50KVA LOAD ON PANEL PA AND ONE OTHER PUMP ALREADY RUNNING. GENERATOR SHALL BE ABLE TO RUN 1/2 OF THE PUMPS. THE STAND BY PUMP IS NOT COUNTED IN THE PUMP TOTAL. FOR OCONUS SITES THE GENERATOR MAY BE SIZED TO RUN FOUR PUMPS AT COMMAND FUELS ENGINEERS REQUEST.
3. SOLID STATE MOTOR STARTERS MAY BE USED INSTEAD OF AUTOTRANSFORMER TYPE WITH APPROVAL OF THE COMMAND FUELS ENGINEER.
4. KIRK KEY INTERLOCK SYSTEM USED ON MAIN AND GENERATOR CIRCUIT BREAKERS TO INSURE BOTH AREN'T CLOSED AT THE SAME TIME.

US ARMY CORPS OF ENGINEERS
OMAHA DISTRICT

MARK	DESCRIPTION	DATE	APPR.

MARK	DESCRIPTION	DATE	APPR.

DESIGNED BY: KEA | DWN BY: KEA | CKD BY: SLO | SUBMITTED BY: SLO | FILE NAME: C037EP601.dwg | SIZE: 33.1X22 | PLOT SCALE: 1 / 1 in. | DATE: JULY 2010 | SOLICITATION NO.: Y | CONTRACT NO.: Y | FILE NUMBER: X | PLOT DATE: 6/28/2010

U. S. ARMY ENGINEER DISTRICT
CORPS OF ENGINEERS
OMAHA DISTRICT

DOD PRESSURIZED FUELING SYSTEM TYPE III

ONE LINE DIAGRAM

SHEET IDENTIFICATION NUMBER
EP601

I:\dwgs\elec\C037EP601.dwg
gBedckea

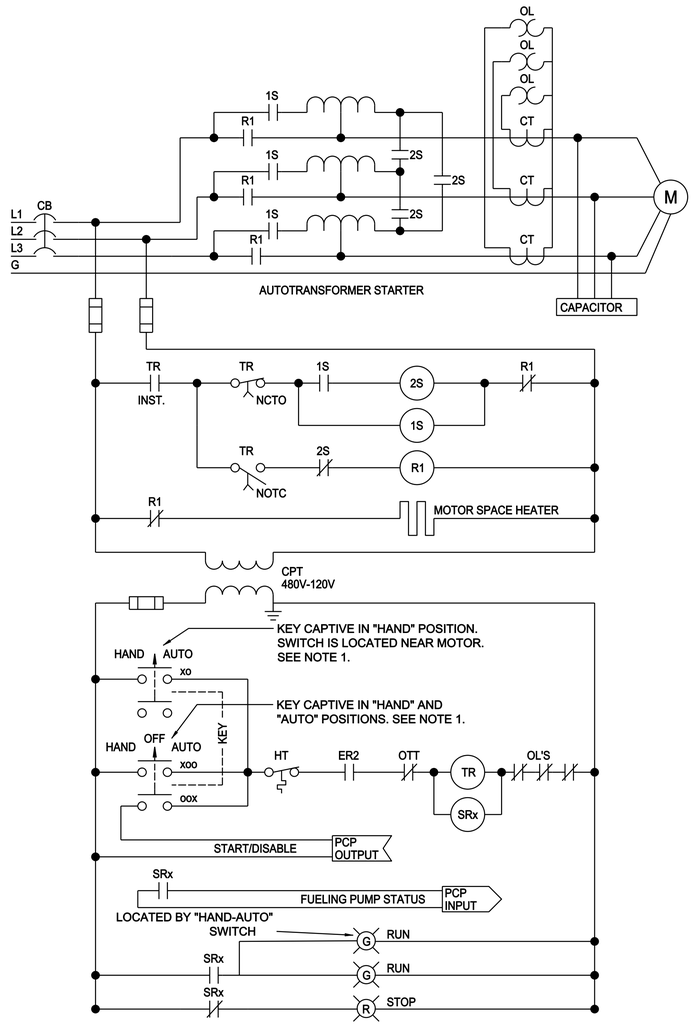

TYPICAL FUELING PUMP (FP-x)

x = 1 FOR FP-1
x = 2 FOR FP-2
x = 3 FOR FP-3
x = 4 FOR FP-4
x = 5 FOR FP-5

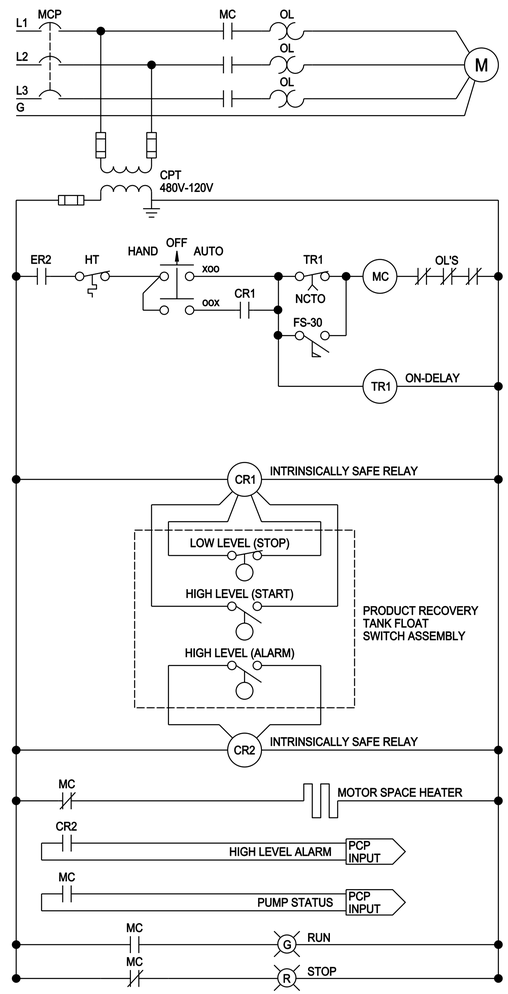

FUELING TRANSFER PUMP (FTP-1)

LOCATED AT PRODUCT RECOVERY TANK

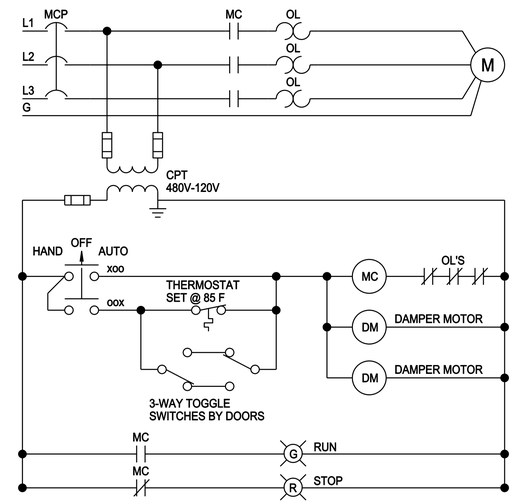

PUMP ROOM EXHAUST FAN

SUPPLEMENTAL LEGEND:

CR CONTROL RELAY
DM DAMPER MOTOR
ER EMERGENCY/SAFTEY SYSTEM RELAY
HT MOTOR HIGH TEMPERATURE
MC MOTOR CONTROLLER
OTT OVER TEMPERATURE THERMOSTAT
ON AUTOTRANSFORMER
SR STATUS RELAY
TR TIMER RELAY
EPDS EMERGENCY POWER DOWN STATION
PCP PUMP CONTROL PANEL
FCC FUELS CONTROL CENTER
ESO EMERGENCY SHUTOFF VALVE

NOTES:

1. KEYED LOCKS FOR LOCAL HAND-AUTO SWITCHES AND CORRESPONDING MCC HOA SWITCHES SHALL BE KEYED ALIKE. KEYED LOCKS FOR HAND-AUTO SWITCHES AND NON-CORRESPONDING MCC HOA SWITCHES SHALL NOT BE KEYED ALIKE.

US ARMY CORPS
OF ENGINEERS
OMAHA DISTRICT

MARK	DESCRIPTION	DATE	APPR.

MARK	DESCRIPTION	DATE	APPR.

U. S. ARMY ENGINEER DISTRICT
CORPS OF ENGINEERS
OMAHA DISTRICT

DESIGNED BY: KEA
DATE: JULY 2010
DWN BY: KEA
CKD BY: SLO
SOLICITATION NO.: Y
SUBMITTED BY: RJS
CONTRACT NO.: X
FILE NAME: C03TEP602.dwg
FILE NUMBER:
SIZE: 33.1X22
PLOT SCALE: 1 / 1in.
PLOT DATE: 6/28/2010

DOD PRESSURIZED FUELING SYSTEM TYPE III

WIRING DIAGRAMS

SHEET
IDENTIFICATION
NUMBER
EP602

I:\dwg\elec\C03TEP602.dwg

g5ed5k4ea

Panel Schedule PANEL PA — 3 Phase 4 Wire — Voltage LL: 208 Voltage LG: 120

OC DEVICES: BREAKER — DEVICE FAMILY: BOLT-ON — MOUNTING: SURFACE — ENCLOSURE: NEMA 1
COMMENTS: 250A MAIN BREAKER — BUS RATING: 400 — FAULT DUTY: 10,000 AIC

CKT. NO.	DESCRIPTION/ LOCATION	*LOAD TYPE	DEM.	TOTAL VA.	DEVICE AMPS	P	PH	DEVICE AMPS	P	TOTAL VA	*LOAD TYPE	DEM.	DESCRIPTION/ LOCATION	CKT NO.
1	LIGHTING AND EF-1	LTG	2	1800	20	1	A	20	1	540	LTG	2	LIGHTING	2
3	LIGHTING	LTG	2	540	20	1	B	20	1	540	LTG	2	LIGHTING	4
5	LIGHTING	LTG	2	540	20	1	C	20	1	540	RECP	3	RECEPTACLE	6
7	RECEPTACLE	RECP	3	540	20	1	A	20	1	1000	SPR	4	SPARE	8
9	RECEPTACLE	RECP	3	1000	20	1	B	20	1	500	RECP	3	RECEPTACLE (TEL)	10
11	SAFETY CIRCUIT POWER	CT	1	500	20	1	C	20	1	1600	MOT	9	PROD. RET. PUMP 1&2	12
13	FIRE ALARM	GEN	1	500	20	1	A	20	1	1000	CT	1	PCP CONTROL POWER	14
15	SPARE	SPR	1	1000	20	1	B	20	1	1000	CT	1	PCP CONTROL POWER	16
17	PRO. RET. TNK LEAK	AL	1	500	20	1	C	20	1	1000	CT	1	PCP CONTROL POWER	18
19	HEAT TAPE	HTR	5	500	20	1	A	20	1	1000	GEN	1	SURGE PROT. DEVICE	20
21	AHU-1 (FAN & 7.2KW)	MOT	9	2771	30	3	B	20	1	1000	GEN	1	REMOTE RINGER	22
23	AHU-1	MOT	9	2771			C	20	1	1000	GEN	1	LEAK DET. PNL	24
25	AHU-1	MOT	9	2771			A	40	3	4200	MOT	10	A/C COND	26
27	SPARE	SPR	4	1000	20	1	B			4200	MOT	10	A/C COND	28
29	GEN. BATTERY CHARGER	CT	1	1000	20	1	C			4200	MOT	10	A/C COND	30
31	LUBE OIL HEATER	HTR	5	1600	20	1	A	20	1	1240	LTS	2	EXTERIOR LTS	32
33	WATER REM PUMP	MDT	9	1000	20	1	B	20	1	1550	LTS	2	EXTERIOR LTS	34
35	ATG	CT	1	500	20	1	C	20	1	930	LTS	2	EXTERIOR LTS	36
37	UNIT HEATER	HTR	5	500	20	1	A	80	3	5000			PANEL PB	38
39	CIR PUMP	MOT	9	500	20	1	B			5000				40
41	WATER COOLER RECP	RECP	3	500	20	1	C			5000				42

THIS PANEL IS LOCATED IN THE CONTROL ROOM.

Panel Schedule PANEL PB — 3 Phase 4 Wire — Voltage LL: 208 Voltage LG: 120

OC DEVICES: BREAKER — DEVICE FAMILY: BOLT-ON — MOUNTING: SURFACE — ENCLOSURE: NEMA 1
COMMENTS: 80A MAIN BREAKER — BUS RATING: 100 — FAULT DUTY: 10,000 AIC

CKT. NO.	DESCRIPTION/ LOCATION	*LOAD TYPE	DEM.	TOTAL VA.	DEVICE AMPS	P	PH	DEVICE AMPS	P	TOTAL VA	*LOAD TYPE	DEM.	DESCRIPTION/ LOCATION	CKT NO.
1	MOV	MOT	9	1000	20	1	A	20	1	1000	SPR	4	SPARE	2
3	MOV	MOT	9	1000	20	1	B	20	1	1000	SPR	4	SPARE	4
5	MOV	MOT	9	1000	20	1	C	20	1	1000	SPR	4	SPARE	6
7	MOV	MOT	9	1000	20	1	A	20	1	1000	SPR	4	SPARE	8
9	GROUND PROVER	GEN	1	1000	20	1	B	20	1	1000	SPR	4	SPARE	10
11	SPARE	SPR	4	1000	20	1	C	20	1	1000	SPR	4	SPARE	12
13	SPARE	SPR	4	1000	20	1	A		1				SPACE	14
15	SPARE	SPR	4	1000	20	1	B		1				SPACE	16
17	SPARE	SPR	4	1000	20	1	C		1				SPACE	18
19	SPARE	SPR	4	1000	20	1	A		1				SPACE	20
21	SPARE	SPR	4	1000	20	1	B		1				SPACE	22
23	SPARE	SPR	4	1000	20	1	C		1				SPACE	24

THIS PANEL IS LOCATED IN THE CONTROL ROOM.

CONDUIT AND CABLE SCHEDULE (POWER)

CKT NO	CIRCUIT FROM	CIRCUIT TO	CONDUIT QTY	CONDUIT SIZE	CONDUCTORS PER CONDUIT QTY	SIZE	GND	TYPE	NOTES
R1	EXIST ELECT MANHOLE	T-1 PRIMARY	2	4"	3	1 (15kV)		XLP	1 SPARE 4" CONDUIT
R2	T-1 SECONDARY	MDS	4	4"	4	500		THWN	1 SPARE 4" CONDUIT
R3	MDS & PANEL PA	GENERATOR	2 1	4" 2"	4	250	2	THWN TW	POWER CONDUCTORS SEE NOTE #1
R4	MDS	MCC	2	4"	3	500	1/0	THWN	
R5	MCC	T-2 PRIMARY	1	1 1/2 "	3	1/0	6	THWN	
R6	T-2 SECONDARY	PANEL PA	1	3"	4	250	2	THWN	
R7	MCC	FTP-1	1	1 1/2 "	3 11	10 12	10	TW TW	MOTOR HEATER & CONTROLS
R8	MCC	FP-1	1	2"	3 4	3/0 12	4	THWN TW	MOTOR HEATER & HIGH TEMP. SW
R9	MCC	FP-2	1	2"	3 4	3/0 12	4	THWN TW	MOTOR HEATER & HIGH TEMP. SW
R10	MCC	FP-3	1	2"	3 4	3/0 12	4	THWN TW	MOTOR HEATER & HIGH TEMP. SW
R11	MCC	FP-4	1	2"	3 4	3/0 12	4	THWN TW	MOTOR HEATER & HIGH TEMP. SW
R12	MCC	FP-5	1	2"	3 4	3/0 12	4	THWN TW	MOTOR HEATER & HIGH TEMP. SW
R13	MCC	HA SWITCH & LIGHT	1	3/4 "	4	12		TW	CONTROLS
R14	PANEL PA	A/C UNIT	1	3/4 "	3	8	10	TW	
R15	PANEL PA	AHU	1	3/4 "	3	8	10	TW	
R16	MCC	PUMP ROOM EXHAUST FAN	1	3/4 "	3	12	12	TW	CONDUIT SIZE AND CONTROL CONDUCTORS AS REQUIRED
R17	MCC	WATER HEATER	1	3/4 "	3	12	12	TW	
R18	PANEL PA	PANEL PB	1	1 1/2 "	4	2	2	THWN	

NOTES:
1. PROVIDE CONDUCTORS FOR SITE SPECIFIC GENERATOR AUXILLARY EQUIPMENT AS REQUIRED. (E.G., BATTERY CHARGER, LUBE OIL HEATER, GLOW PLUGS, JACKET WATER HEATER, ETC.)

CONDUIT AND CABLE SCHEDULE (CONTROL)

CKT NO	CIRCUIT FROM	CIRCUIT TO	CONDUIT QTY	CONDUIT SIZE	CONDUCTORS PER CONDUIT QTY	SIZE	GND	TYPE	NOTES
C1	PCP	J1	1	1"	20	14		TW	
C2	J1	FS-1	1	1/2 "	4	14		TW	
C3	J1	J2	1	1"	16	14		TW	
C4	J2	FS-2	1	1/2 "	4	14		TW	
C5	J2	J3	1	1"	12	14		TW	
C6	J3	FS-3	1	1/2 "	4	14		TW	
C7	J3	J4	1	3/4 "	8	14		TW	
C8	J4	FS-4	1	1/2 "	4	14		TW	
C9	J4	J5	1	1/2 "	4	14		TW	
C10	J5	FS-5	1	1/2 "	4	14		TW	
C11	PCP	J6	1	1"	2	2/C 14		TC	SHIELDED CABLE
C12	J6	PIT-1 & PIT-2	1	1/2 "	1	2/C 14		TC	SHIELDED CABLE
C13	MCC	ESO-1,2,3,4, & 5	1	1/2 "	2	14		TW	
C14	PCP	J7	1	1"	2	2/C 14		TC	SHIELDED CABLE
C15	J7	DPT-1 & DPT-2	1	1/2 "	1	2/C 14		TC	SHIELDED CABLE
C16	PCP	J8	1	1"	2	2/C 14		TC	SHIELDED CABLE
C17	J8	J9	1	1/2 "	1	2/C 14		TC	SHIELDED CABLE
C18	PCP	J12	1	1"	2	2/C 14		TC	SHIELDED CABLE
C19	J12	PS1 OR PS2	1	1/2 "	1	2/C 14		TC	SHIELDED CABLE
C20	J8	DPT-3	1	1/2 "	1	2/C 14		TC	SHIELDED CABLE
C21	J9	DPT-4	1	1/2 "	1	2/C 14		TC	SHIELDED CABLE
C22	PCP	PS3	1	1/2 "	1	2/C 14		TC	SHIELDED CABLE
C23	PCP	J10	1	1"	12	14		TW	
C24	J10	BPCV-1 A&B	1	1/2 "	2	14		TW	
C25	J10	J11	1	3/4 "	8	14		TW	
C26	J11	D/FV-1 A & B	1	1/2 "	2	14		TW	
C27	J11	PCV A&B	1	1/2 "	2	14		TW	
C28	PCP	MCC	1	2"	40	14		TW	CONTROL, INCLUDES SPARES
C29	PCP	FS	1	1/2 "	2	14		TW	
C30									
C31	TIGHTNESS TEST PANEL	J14	1	1/2 "	1	2/C 14		TC	SHIELDED CABLE
C32	J14	PIT-3	1	1/2 "	1	2/C 14		TC	SHIELDED CABLE
C33	PCP	J15	1	2"	20	14		TW	CONTROL, INCLUDES SPARES
C34	J15	LS1 THRU LS4	1	1/2 "	2	14		TW	
C35	J15	J16	1	1"	10	14		TW	CONTROL, INCLUDES SPARES
C36	J16	LS5 THRU LS8	1	1/2 "	2	14		TW	
C37	PCP	J17	1	1"	16	14		TW	CONTROL TO MOVS
C38	J17	MOVs	1	3/4 "	8	14		TW	CONTROL TO MOVS
C39	PCP	J18	1	1"	16	14		TW	CONTROL TO MOVS
C40	J18	MOVs	1	3/4 "	8	14		TW	CONTROL TO MOVS
C41	PCP	J19	1	3/4 "	6	14		TW	CONTROL, INCLUDES SPARES
C42	J19	HLA OR LLA	1	1/2 "	2	14		TW	CONTROL

US ARMY CORPS OF ENGINEERS
OMAHA DISTRICT

MARK	DESCRIPTION	DATE	APPR.

MARK	DESCRIPTION	DATE	APPR.

U. S. ARMY ENGINEER DISTRICT
CORPS OF ENGINEERS
OMAHA DISTRICT

DESIGNED BY: KEA — DATE: JULY 2010
DWN BY: KEA — CKD BY: SLO — SOLICITATION NO.: Y
SUBMITTED BY: RLE — CONTRACT NO.: Y
FILE NAME: OD37EP603.dwg — FILE NUMBER:
SIZE: 33.1X22 — PLOT SCALE: 1 1 / in. — PLOT DATE: 6/28/2010

DOD PRESSURIZED FUELING SYSTEM TYPE III

SCHEDULE SHEET

SHEET IDENTIFICATION NUMBER
EP603

I:\dwga\elec\OD37EP603.dwg
g6eck6ea

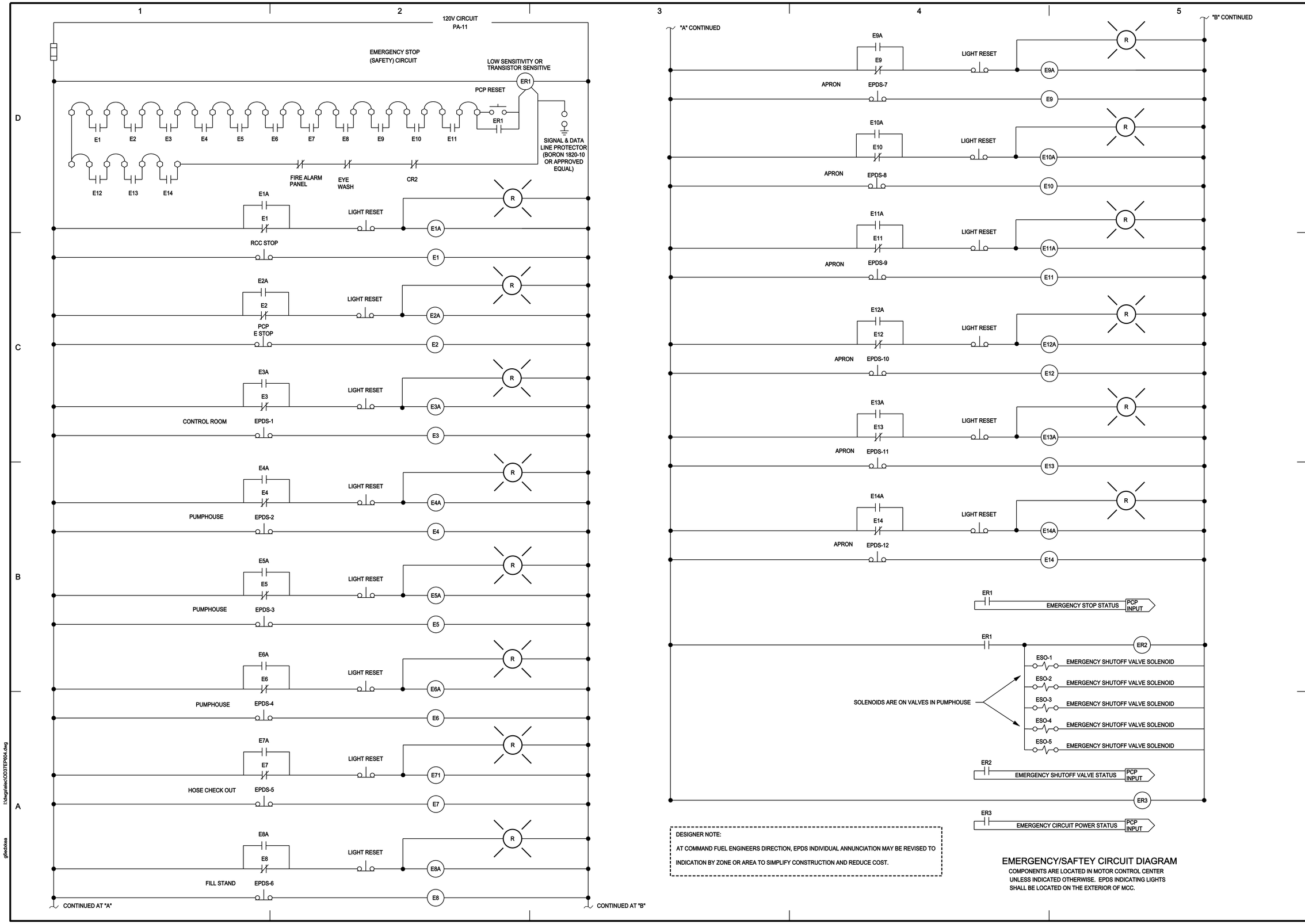
120V CIRCUIT
PA-11
EMERGENCY STOP
(SAFETY) CIRCUIT
LOW SENSITIVITY OR
TRANSISTOR SENSITIVE
ER1
PCP RESET
E1 E2 E3 E4 E5 E6 E7 E8 E9 E10 E11
E12 E13 E14
FIRE ALARM
PANEL
EYE
WASH
CR2
SIGNAL & DATA
LINE PROTECTOR
(BORON 1820-10
OR APPROVED
EQUAL)
E1A
E1
LIGHT RESET
RCC STOP
E2A
E2
PCP
E STOP
E3A
E3
CONTROL ROOM
EPDS-1
E4A
E4
PUMPHOUSE
EPDS-2
E5A
E5
EPDS-3
E6A
E6
EPDS-4
E7A
E7
HOSE CHECK OUT
EPDS-5
E8A
E8
FILL STAND
EPDS-6
R
CONTINUED AT "A"
CONTINUED AT "B"
"A" CONTINUED
"B" CONTINUED
E9A
E9
EPDS-7
E10A
E10
EPDS-8
E11A
E11
EPDS-9
E12A
E12
EPDS-10
E13A
E13
EPDS-11
E14A
E14
EPDS-12
ER1
EMERGENCY STOP STATUS
PCP
INPUT
ER2
ESO-1
ESO-2
ESO-3
ESO-4
ESO-5
EMERGENCY SHUTOFF VALVE SOLENOID
SOLENOIDS ARE ON VALVES IN PUMPHOUSE
EMERGENCY SHUTOFF VALVE STATUS
ER3
EMERGENCY CIRCUIT POWER STATUS
DESIGNER NOTE:
AT COMMAND FUEL ENGINEERS DIRECTION, EPDS INDIVIDUAL ANNUNCIATION MAY BE REVISED TO
INDICATION BY ZONE OR AREA TO SIMPLIFY CONSTRUCTION AND REDUCE COST.
EMERGENCY/SAFTEY CIRCUIT DIAGRAM
COMPONENTS ARE LOCATED IN MOTOR CONTROL CENTER
UNLESS INDICATED OTHERWISE. EPDS INDICATING LIGHTS
SHALL BE LOCATED ON THE EXTERIOR OF MCC.
US ARMY CORPS
OF ENGINEERS
OMAHA DISTRICT
MARK
DESCRIPTION
DATE
APPR.
DESIGNED BY: KEA
DWN BY: KEA
CKD BY: SLO
SUBMITTED BY: RLS
DATE: JULY 2010
SOLICITATION NO.: Y
CONTRACT NO.:
FILE NUMBER:
FILE NAME: OD37EP604.dwg
SIZE: 33.1X22
PLOT SCALE: 1 / 1in.
PLOT DATE: 6/28/2010
U. S. ARMY ENGINEER DISTRICT
CORPS OF ENGINEERS
OMAHA DISTRICT
DOD PRESSURIZED FUELING SYSTEM TYPE III
EPDS WIRING DIAGRAM
SHEET
IDENTIFICATION
NUMBER
EP604
I:\dwg\elec\OD37EP604.dwg
g5ecb4ea

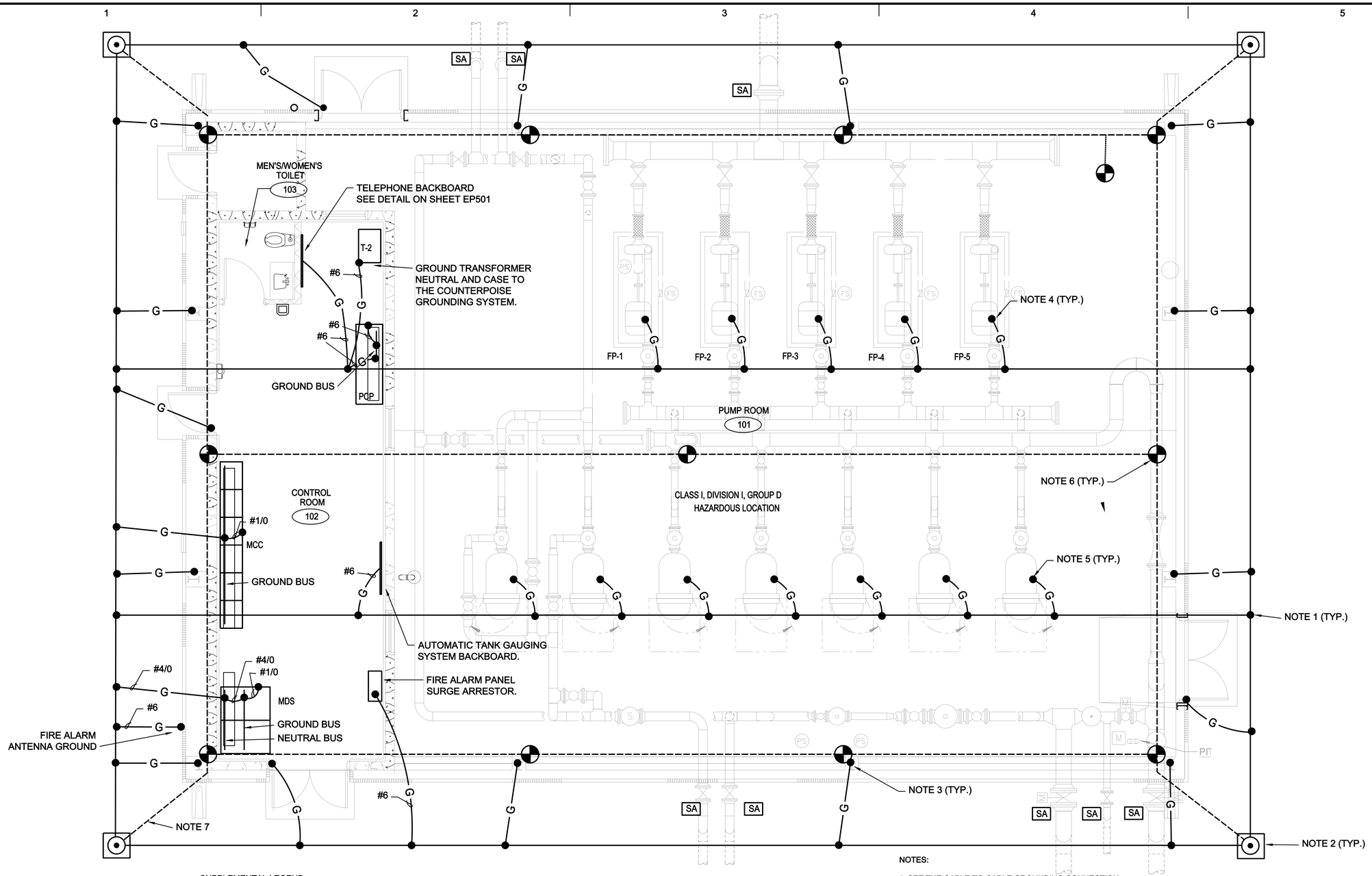

SUPPLEMENTAL LEGEND:

- COPPERCLAD GROUND ROD. SEE GROUND ROD BOX DETAIL #3 ON SHEET EP501.
- COPPERCLAD GROUND ROD.
- AIR TERMINAL 24" x 3/8" COPPER.
- COUNTERPOISE. #4/0 BARE COPPER.
- MAIN AND DOWN LIGHTNING PROTECTION CONDUCTOR. MIN. SIZE PER NFPA 780.
- G — #1/0 BARE COPPER OR AS INDICATED.
- SA — INSULATING FLANGE SURGE ARRESTER, PER SPECIFICATION 33 52 43.13 AND DETAIL ON SHEET MS505.

NOTES:

1. SEE THE CABLE-TO-CABLE GROUNDING CONNECTION DETAIL #2 ON SHEET EP501.
2. SEE THE GROUND ROD DETAIL #3 ON SHEET EP501.
3. SEE THE STEEL COLUMN GROUNDING DETAIL #4 ON SHEET EP501.
4. SEE THE FUELING PUMP MOTOR GROUNDING DETAIL #5 ON SHEET EP501.
5. SEE THE FILTER SEPARATOR GROUNDING DETAIL #6 ON SHEET EP501.
6. SEE DETAIL #1 ON SHEET EP501.
7. THE DOWN CONDUCTORS SHALL BE RUN DOWN THE COLUMN IN PVC CONDUIT. THE DOWN CONDUCTORS SHALL HAVE EITHER A STRAIGHT OR PARALLEL (ACCESSIBLE) SPLICE INSTALLED NEAR GROUND LEVEL JUST BEFORE THE CABLES ENTER THE GROUND.

US ARMY CORPS OF ENGINEERS
OMAHA DISTRICT

MARK	DESCRIPTION	DATE	APPR.

MARK	DESCRIPTION	DATE	APPR.

U. S. ARMY ENGINEER DISTRICT
CORPS OF ENGINEERS
OMAHA DISTRICT

DESIGNED BY: KEA | DATE: JULY 2010
DWN BY: KEA | CKD BY: SLO | SOLICITATION NO.: Y
SUBMITTED BY: N/A | CONTRACT NO.: Y
FILE NAME: OD37EG101.dwg | FILE NUMBER:
SIZE: 33.1X22 | PLOT SCALE: 1 / in. | PLOT DATE: 9/28/2010

DOD PRESSURIZED FUELING SYSTEM TYPE III

GROUNDING PLAN

SHEET IDENTIFICATION NUMBER
EG101

t:\dwga\elec\OD37EG101.dwg
g5ed0ktea

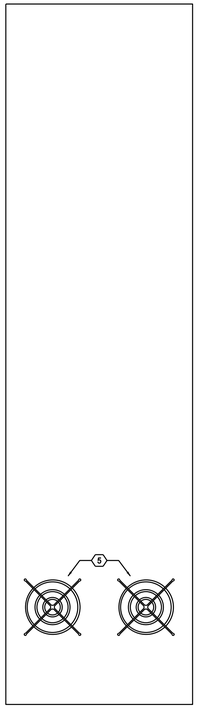

LEFT SIDE VIEW

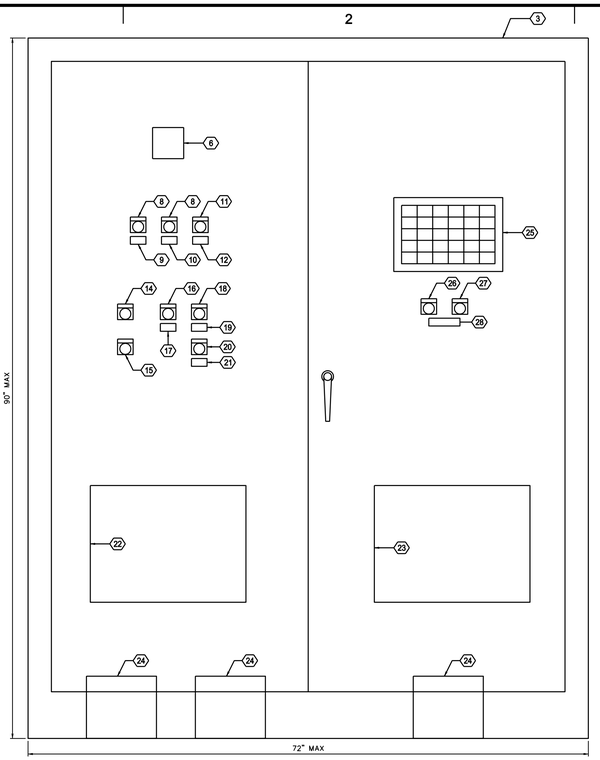

FRONT VIEW

PUMP CONTROL PANEL (PCP)

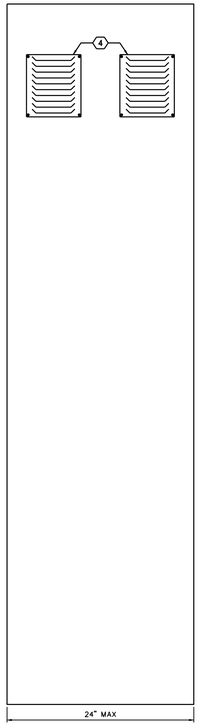

RIGHT SIDE VIEW

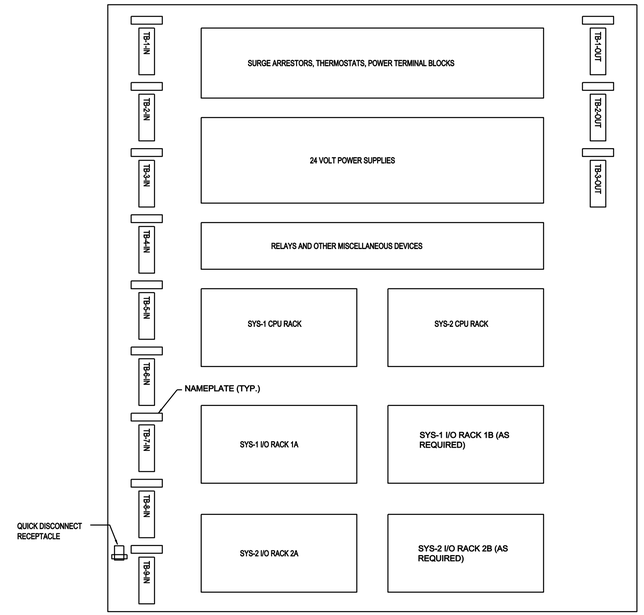

NOTES:

1. PROVIDE WIRE MANAGEMENT DUCTS.

2. FOLLOW THE ABOVE LAYOUT AS CLOSE AS POSSIBLE TO PROVIDE UNIFORMITY WITH EXISTING AND FUTURE FUELING SYSTEM CONTROL PANELS.

INTERIOR BACKPLAIN MOUNTING PANEL

NOTES:

1. SEE SHEETS EI502 THRU EI504 AND EI601 THRU EI604 FOR OTHER CONTROL PANEL RELATED REQUIREMENTS.

PUMP CONTROL PANEL LEGEND

ITEM	DESCRIPTION
1	NOT USED
2	NOT USED
3	FREE STANDING ENCLOSURE
4	VENTS
5	FANS
6	VIBRATING ALARM HORN (70db at 10 ft)
7	NOT USED
8	GREEN INDICATOR LIGHT
9	NAMEPLATE "CPU-1 ON"
10	NAMEPLATE "CPU-2 ON"
11	WHITE INDICATOR LIGHT
12	NAMEPLATE "EMERGENCY CIRCUIT POWER ON"
13	NOT USED
14	RED JUMBO MUSHROOM MOMENTARY CONTACT PUSHBUTTON WITH LEGEND PLATE "EMERGENCY STOP"
15	MOMENTARY CONTACT PUSHBUTTON WITH LEGEND PLATE "EMERGENCY STOP RESET"

PUMP CONTROL PANEL LEGEND CONT.

ITEM	DESCRIPTION
16	2 POSITION MAINTAINED CONTACT SELECTOR SWITCH WITH LEGEND PLATE " SYS-1 SYS-2"
17	NAMEPLATE "SYSTEM INPUT SELECT"
18	4 POSITION KEY OPERATED MAINTAINED CONTACT SELECTOR SWITCH WITH LEGEND PLATE "AUTO OFF FLUSH TEST"
19	NAMEPLATE "FUELING MODE SELECT"
20	5 POSITION MAINTAINED CONTACT SELECTOR SWITCH WITH LEGEND PLATE "1 2 3 4 5" (CIRCULAR AROUND SWITCH)
21	NAMEPLATE "LEAD FUEL PUMP"
22	LOCKABLE CABINET LOCATED WITHIN THE PCP FOR THE LAPTOP COMPUTER.
23	CABINET WITHIN PCP FOR SPARE PARTS
24	UNINTERRUPTABLE POWER SUPPLY (UPS) WITHIN CABINET
25	BACKLIGHT WINDOW ANNUNCIATOR
26	MOMENTARY CONTACT PUSHBUTTON WITH LEGEND PLATE "TEST"
27	MOMENTARY CONTACT PUSHBUTTON WITH LEGEND PLATE "ACKNOWLEDGE"
28	NAMEPLATE "ANNUNCIATOR SYSTEM"

US ARMY CORPS OF ENGINEERS
OMAHA DISTRICT

MARK	DESCRIPTION	DATE	APPR.

MARK	DESCRIPTION	DATE	APPR.

U. S. ARMY ENGINEER DISTRICT
CORPS OF ENGINEERS
OMAHA DISTRICT

DESIGNED BY: KEA
DWN BY: SCD
CKD BY: SLO
SUBMITTED BY:
SIZE: ANSI D
FILE NAME: OD37EI501.dwg
DATE: JULY 2010
SOLICITATION NO.: Y
CONTRACT NO.: Y
FILE NUMBER:
SIZE: 33.1X22
PLOT SCALE: 1 / in.
PLOT DATE: 6/28/2010

DOD PRESSURIZED FUELING SYSTEM TYPE III

PUMP CONTROL PANEL ELEVATION

SHEET IDENTIFICATION NUMBER
EI501

I:\dwgs\elec\OD37EI501.dwg
gBedckkea

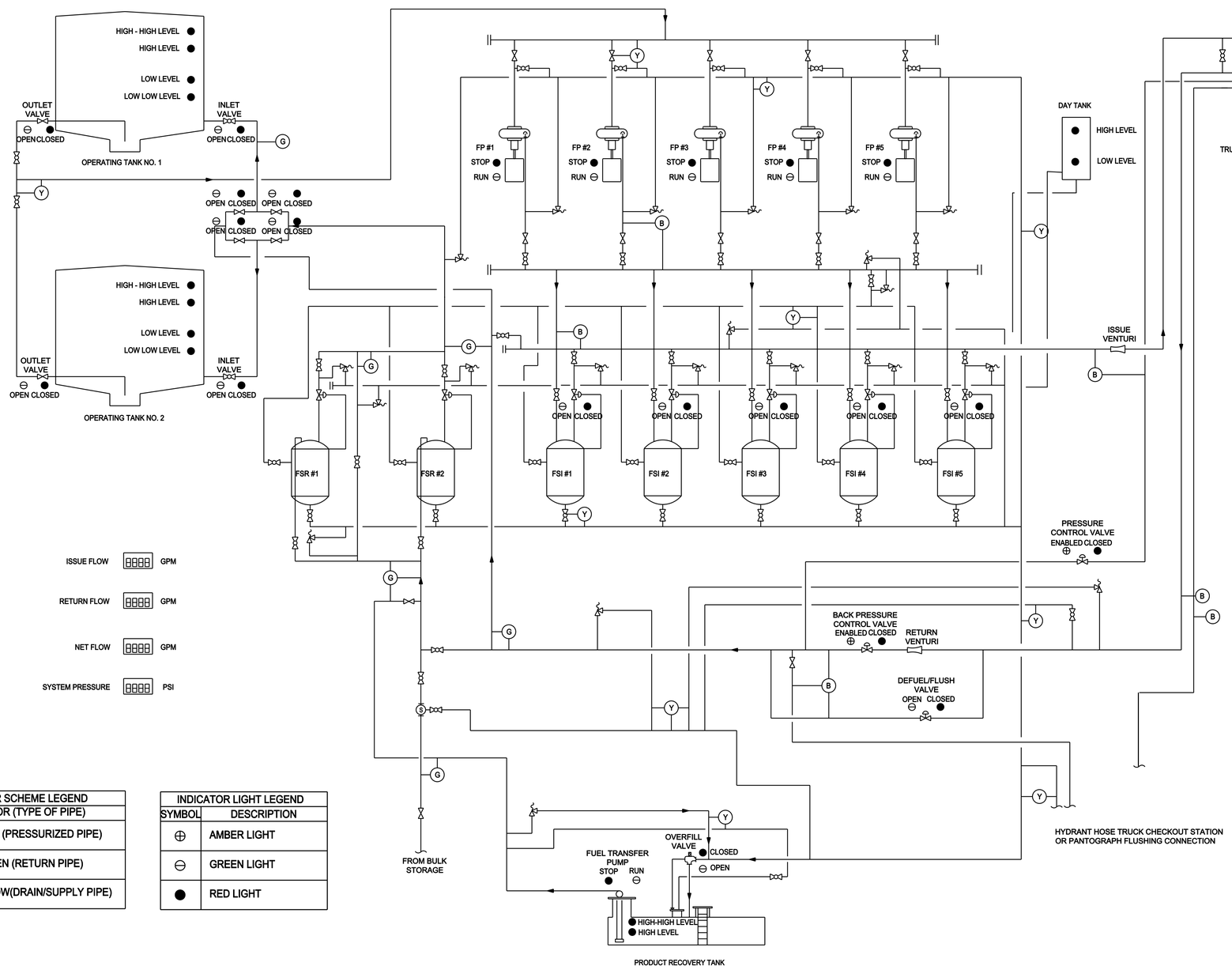

NOTES TO DESIGNER:

1. SHOW THE HYDRANT HOSE CHECK OUT STATION OR THE PANTAGRAPH FLUSHING CONNECTION AS APPLICABLE, ON THE GRAPHIC PANEL. ADDITIONALLY SHOW THE TRUCK FILL STAND IF ONE IS INCLUDED WITH THE SYSTEM.

COLOR SCHEME LEGEND	
MARK	COLOR (TYPE OF PIPE)
B	BLUE (PRESSURIZED PIPE)
G	GREEN (RETURN PIPE)
Y	YELLOW(DRAIN/SUPPLY PIPE)

INDICATOR LIGHT LEGEND	
SYMBOL	DESCRIPTION
⊕	AMBER LIGHT
⊖	GREEN LIGHT
●	RED LIGHT

NOTES:

1. NOT USED

2. DEVIATION FROM THIS GRAPHIC DISPLAY IS ALLOWED ONLY WITH APPROVAL OF THE COMMAND FUEL ENGINEER.

US ARMY CORPS OF ENGINEERS
OMAHA DISTRICT

MARK	DESCRIPTION	DATE	APPR.

MARK	DESCRIPTION	DATE	APPR.

U. S. ARMY ENGINEER DISTRICT
CORPS OF ENGINEERS
OMAHA DISTRICT

DESIGNED BY: KEA
DWN BY: KEA
CKD BY: SLO
SUBMITTED BY: SLO
SIZE: X
FILE NAME: C0D7E502.dwg
SIZE: 33.1X22
PLOT SCALE: 1 / in.
DATE: JULY 2010
SOLICITATION NO.: Y
CONTRACT NO.: Z
FILE NUMBER: X
PLOT DATE: 6/28/2010

DOD PRESSURIZED FUELING SYSTEM TYPE III

GRAPHIC DISPLAY

SHEET IDENTIFICATION NUMBER
EI502

gbeckkea

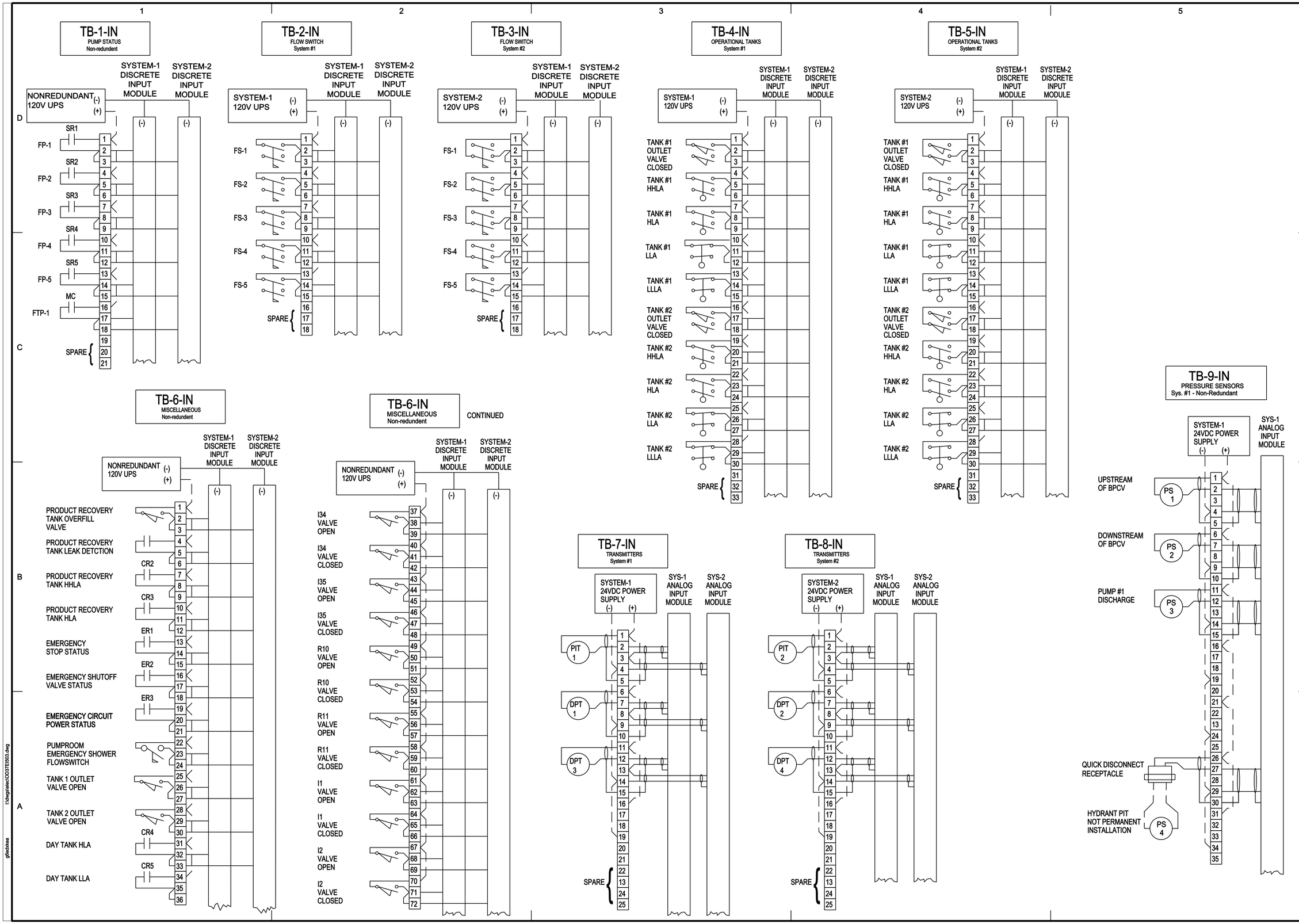

US ARMY CORPS OF ENGINEERS
OMAHA DISTRICT

MARK	DESCRIPTION	DATE	APPR.

MARK	DESCRIPTION	DATE	APPR.

U. S. ARMY ENGINEER DISTRICT
CORPS OF ENGINEERS
OMAHA DISTRICT

DESIGNED BY: KEA
DATE: JULY 2010
DWN BY: KEA
CKD BY: SLO
SOLICITATION NO.: Y
SUBMITTED BY:
CONTRACT NO.: X
FILE NAME: C03TEI503.dwg
FILE NUMBER: X
SIZE: 33.1X22
PLOT SCALE: 1 / 1in.
PLOT DATE: 6/28/2010

DOD PRESSURIZED FUELING SYSTEM TYPE III

TERMINAL BLOCK CONNECTIONS
(FOR FIELD DEVICES)
SHEET 1

SHEET IDENTIFICATION NUMBER
EI503

I:\dwg\elec\C03TEI503.dwg
g6ed0k4ea

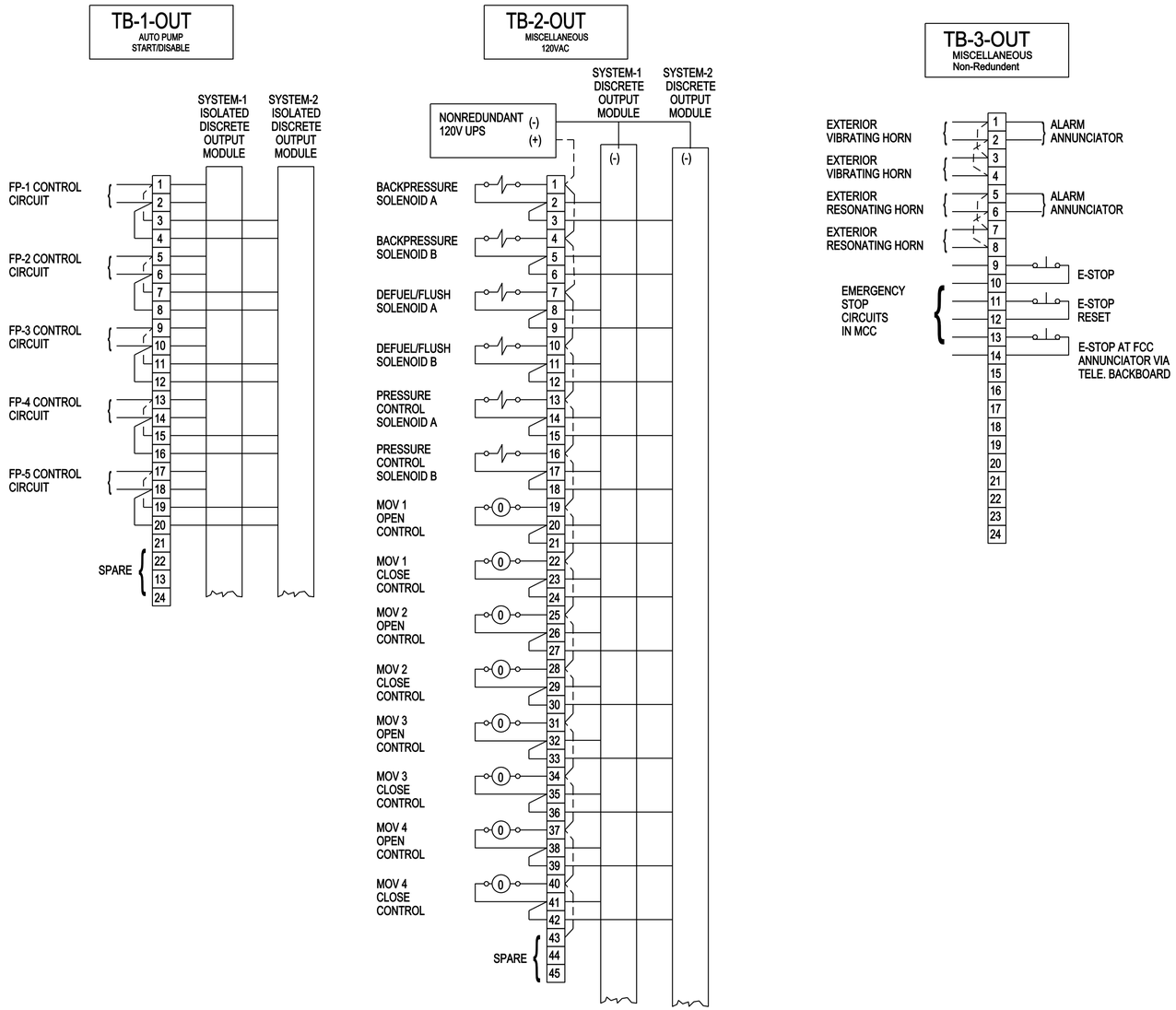

NOTES TO DESIGNER:

1. IF ELECTRONIC TYPE LEVEL ALARMS ARE TO BE USED INSTEAD OF MECHANICAL FLOAT TYPE AS SHOWN ON TERMINAL BOARDS TB-4-IN AND TB-5-IN, THE DESIGNER SHALL RE-ARRANGE INPUTS AS REQUIRED TO ACCOMODATE THE ELECTRONIC INPUTS INTO THE PLCS.

TB-1-IN
PUMP STATUS
Non-redundent

FIRST LINE OF TEXT SHALL BE 1/4 " HEIGHT AND THE SECOND AND/OR THIRD LINES SHALL BE 1/8 " HEIGHT. SEE THIS SHEET FOR FULL TEXT.

TYPICAL TERMINAL BLOCK NAMEPLATE

NOTE:

THESE TERMINAL BLOCK CONNECTIONS ARE INTENDED TO SHOW CONNECTIONS TO FIELD DEVICES ONLY. THE PUMP CONTROL PANEL MANUFACTURER MAY REQUIRE SEVERAL MORE TERMINAL BLOCKS FOR CONNECTIONS TO ANNUNCIATOR, GRAPHICS PANEL, PERSONAL COMPUTER, HORNS, ETC.

US ARMY CORPS OF ENGINEERS
OMAHA DISTRICT

MARK	DESCRIPTION	DATE	APPR.

MARK	DESCRIPTION	DATE	APPR.

U. S. ARMY ENGINEER DISTRICT
CORPS OF ENGINEERS
OMAHA DISTRICT

DESIGNED BY: KEA | DATE: JULY 2010
DWN BY: KEA | CKD BY: SLO | SOLICITATION NO.: Y
SUBMITTED BY: RLA | CONTRACT NO.: Y-
FILE NAME: C037IEI504.dwg | FILE NUMBER:
SIZE: 33.1X22 | PLOT SCALE: 1 / in. | PLOT DATE: 6/28/2010

DOD PRESSURIZED FUELING SYSTEM TYPE III

TERMINAL BLOCK CONNECTIONS
(FOR FIELD DEVICES)
SHEET 2

SHEET IDENTIFICATION NUMBER
EI504

I:\dwgs\elec\C037IEI504.dwg
g5edckea

NOTES TO DESIGNER

1. PLACE THE APPROPRIATE FCC INFORMATION ON THIS SHEET.

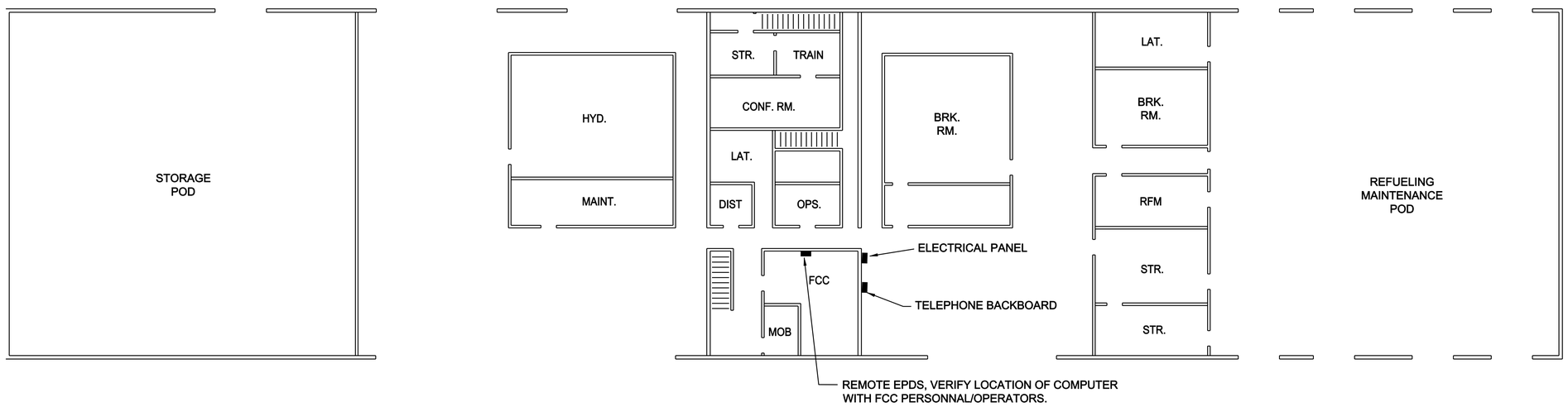

TYPICAL EXISTING FUELS CONTROL CENTER (FCC) BLDG. FLOOR PLAN

16' 8' 0 16'

SCALE: 1/16" = 1'-0"

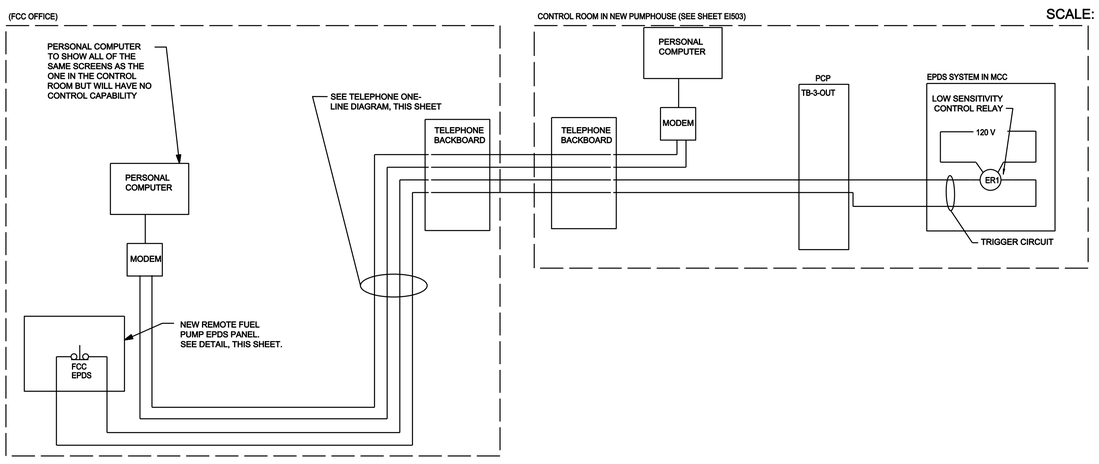

FCC OFFICE/CONTROL ROOM REMOTE EPDS AND COMPUTER SCHEMATIC

NO SCALE

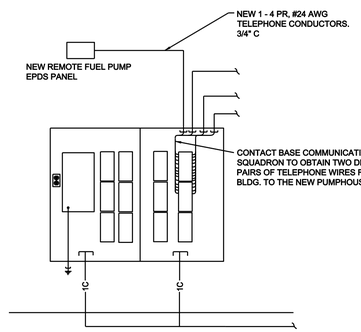

TYPICAL EXISTING (FCC) TELEPHONE BACKBOARD

NO SCALE

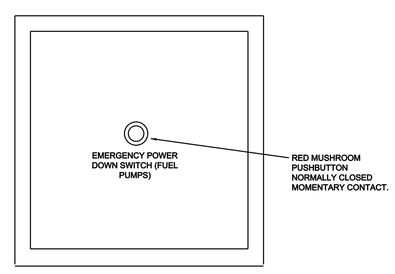

REMOTE FUEL PUMP EPDS PANEL

NO SCALE

US ARMY CORPS OF ENGINEERS
OMAHA DISTRICT

MARK	DESCRIPTION	DATE	APPR.

MARK	DESCRIPTION	DATE	APPR.

U. S. ARMY ENGINEER DISTRICT
CORPS OF ENGINEERS
OMAHA DISTRICT

DESIGNED BY: KEA | DATE: JULY 2010
DWN BY: KEA | CKD BY: SLO | SOLICITATION NO.: Y
SUBMITTED BY: SLO | CONTRACT NO.:
FILE NAME: C037E505.dwg | FILE NUMBER:
SIZE: 33.1X22 | PLOT SCALE: 1 / 1in. | PLOT DATE: 6/28/2010

DOD PRESSURIZED FUELING SYSTEM TYPE III

EPDS CONTROLS AT FCC

SHEET IDENTIFICATION NUMBER
EI505

I:\dwgs\elec\C037E505.dwg

gBeckkea

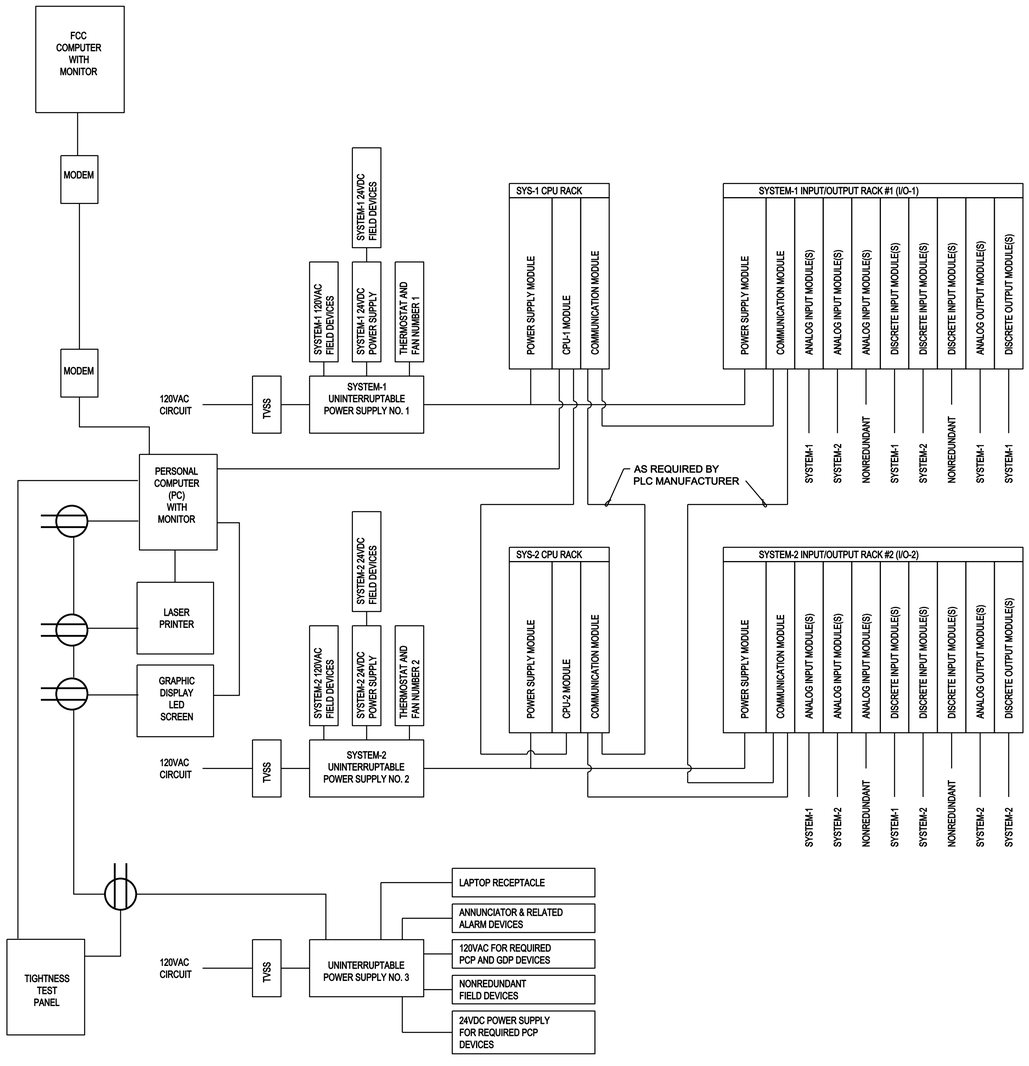

CONTROL SYSTEM BLOCK DIAGRAM

OPERATING TANK #1 HIGH-HIGH LEVEL (RED)	OPERATING TANK #2 HIGH-HIGH LEVEL (RED)	DAY TANK HIGH LEVEL (RED)	FUEL PUMP #1 FAILURE (WHITE)	EMERGENCY STOP (RED)
OPERATING TANK #1 HIGH LEVEL (WHITE)	OPERATING TANK #2 HIGH LEVEL (WHITE)	DAY TANK LOW LEVEL (WHITE)	FUEL PUMP #2 FAILURE (WHITE)	EMERGENCY SHOWER ALARM (RED)
OPERATING TANK #1 LOW LEVEL (WHITE)	OPERATING TANK #2 LOW LEVEL (WHITE)	(BLANK) (WHITE)	FUEL PUMP #3 FAILURE (WHITE)	SYSTEM-1 PLC FAILURE (WHITE)
OPERATING TANK #1 LOW-LOW LEVEL (RED)	OPERATING TANK #2 LOW-LOW LEVEL (RED)	(BLANK) (WHITE)	FUEL PUMP #4 FAILURE (WHITE)	SYSTEM-1 DATA FAILURE (WHITE)
PRODUCT RECOVERY TANK HIGH-HIGH LEVEL (RED)	PRODUCT RECOVERY TANK OVERFILL VALVE CLOSED (WHITE)	4 VALVE MANIFOLD/TANK SETUP ERROR (WHITE)	FUEL PUMP #5 FAILURE (WHITE)	SYSTEM-2 PLC FAILURE (WHITE)
PRODUCT RECOVERY TANK HIGH LEVEL (WHITE)	PRODUCT RECOVERY TANK LEAK DETECTED (WHITE)	PCP HIGH TEMPERATURE (WHITE)	(BLANK) (WHITE)	SYSTEM-2 DATA FAILURE (WHITE)

ANNUNCIATOR PANEL LAYOUT

NOTES:

1. (WHITE) - WHITE WINDOW WITH BLACK LETTERS
2. (RED) - RED WINDOW WITH WHITE LETTERS
3. RED WINDOW ALARMS (CRITICAL) SHALL SOUND THE EXTERIOR RESONATING HORNS AND PUMP CONTROL PANEL HORN. THE WHITE WINDOW ALARMS (NON-CRITICAL) SHALL SOUND THE EXTERIOR VIBRATING HORNS AND THE PUMP CONTROL PANEL HORN.
4. CRITICAL ALARMS SHALL STOP ALL PUMPS RUNNING IN AUTOMATIC MODE.

US ARMY CORPS OF ENGINEERS
OMAHA DISTRICT

MARK	DESCRIPTION	DATE	APPR.

MARK	DESCRIPTION	DATE	APPR.

U. S. ARMY ENGINEER DISTRICT
CORPS OF ENGINEERS
OMAHA DISTRICT

DESIGNED BY: KEA | DATE: JULY 2010
DWN BY: KEA | CKD BY: SLO | SOLICITATION NO.: Y
SUBMITTED BY: RE | CONTRACT NO.: Y
FILE NAME: OD37E601.dwg | FILE NUMBER: X
SIZE: 33.1X22 | PLOT SCALE: 1 / in. | PLOT DATE: 6/28/2010

DOD PRESSURIZED FUELING SYSTEM TYPE III

CONTROL SYSTEM DIAGRAMS

SHEET IDENTIFICATION NUMBER
EI601

I:\dwgs\elec\OD37E601.dwg
g6edckea

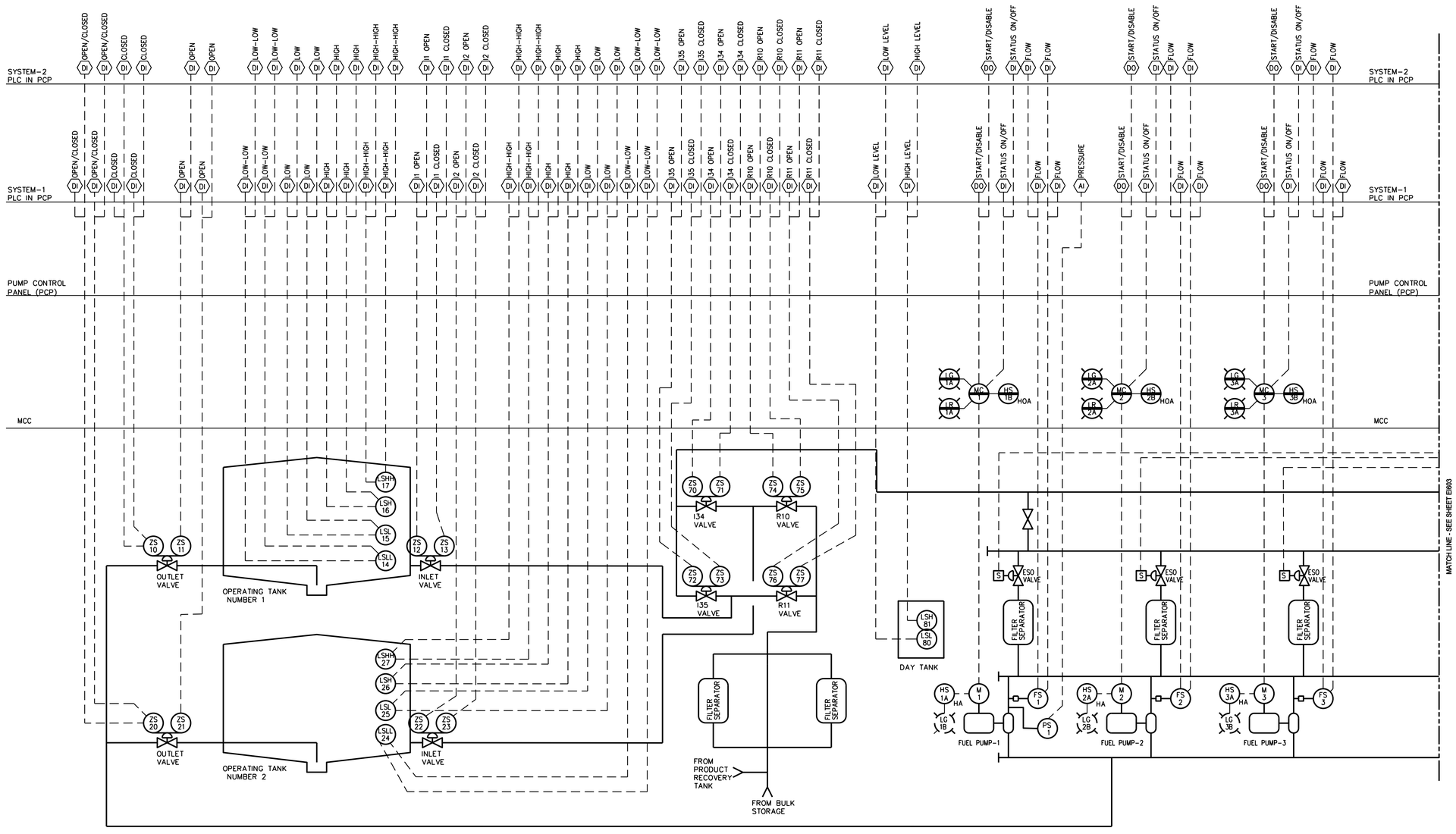

US ARMY CORPS OF ENGINEERS
OMAHA DISTRICT

MARK	DESCRIPTION	DATE	APPR.

MARK	DESCRIPTION	DATE	APPR.

U. S. ARMY ENGINEER DISTRICT
CORPS OF ENGINEERS
OMAHA DISTRICT

DESIGNED BY: KEA	DATE: JULY 2010
DWN BY: KEA	CKD BY: SLO
SUBMITTED BY: SLO	SOLICITATION NO.: Y
	CONTRACT NO.:
FILE NAME: OD37EI602.dwg	FILE NUMBER:
SIZE: 33.1X22	PLOT SCALE: 1 / in.
	PLOT DATE: 6/28/2010

DOD PRESSURIZED FUELING SYSTEM TYPE III

CONTROL SYSTEM I/O
SHEET 1

SHEET IDENTIFICATION NUMBER
EI602

I:\dwgs\elec\OD37EI602.dwg

gbedckea

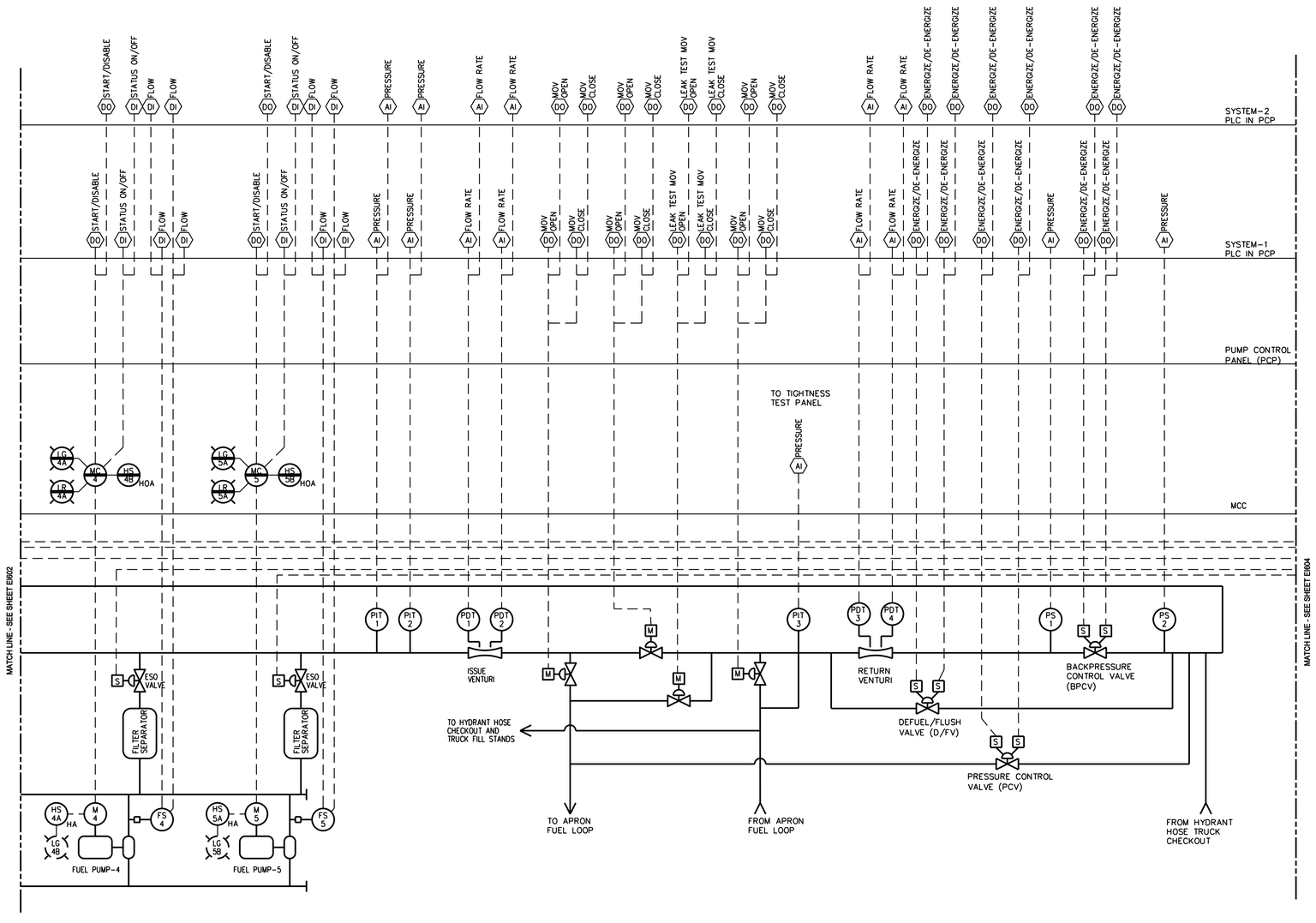

US ARMY CORPS OF ENGINEERS
OMAHA DISTRICT

MARK	DESCRIPTION	DATE	APPR.

MARK	DESCRIPTION	DATE	APPR.

DESIGNED BY: KEA
DATE: JULY 2010
DWN BY: KEA
CKD BY: SLO
SOLICITATION NO.: Y
SUBMITTED BY: RLB
CONTRACT NO.: Y
FILE NAME: C03TEI603.dwg
FILE NUMBER:
SIZE: 33.1X22
PLOT SCALE: 1 / 1in.
PLOT DATE: 6/28/2010

U. S. ARMY ENGINEER DISTRICT
CORPS OF ENGINEERS
OMAHA DISTRICT

DOD PRESSURIZED FUELING SYSTEM TYPE III

CONTROL SYSTEM I/O
SHEET 2

SHEET IDENTIFICATION NUMBER
EI603

I:\dwg\elec\C03TEI603.dwg
g5ed3k4ea

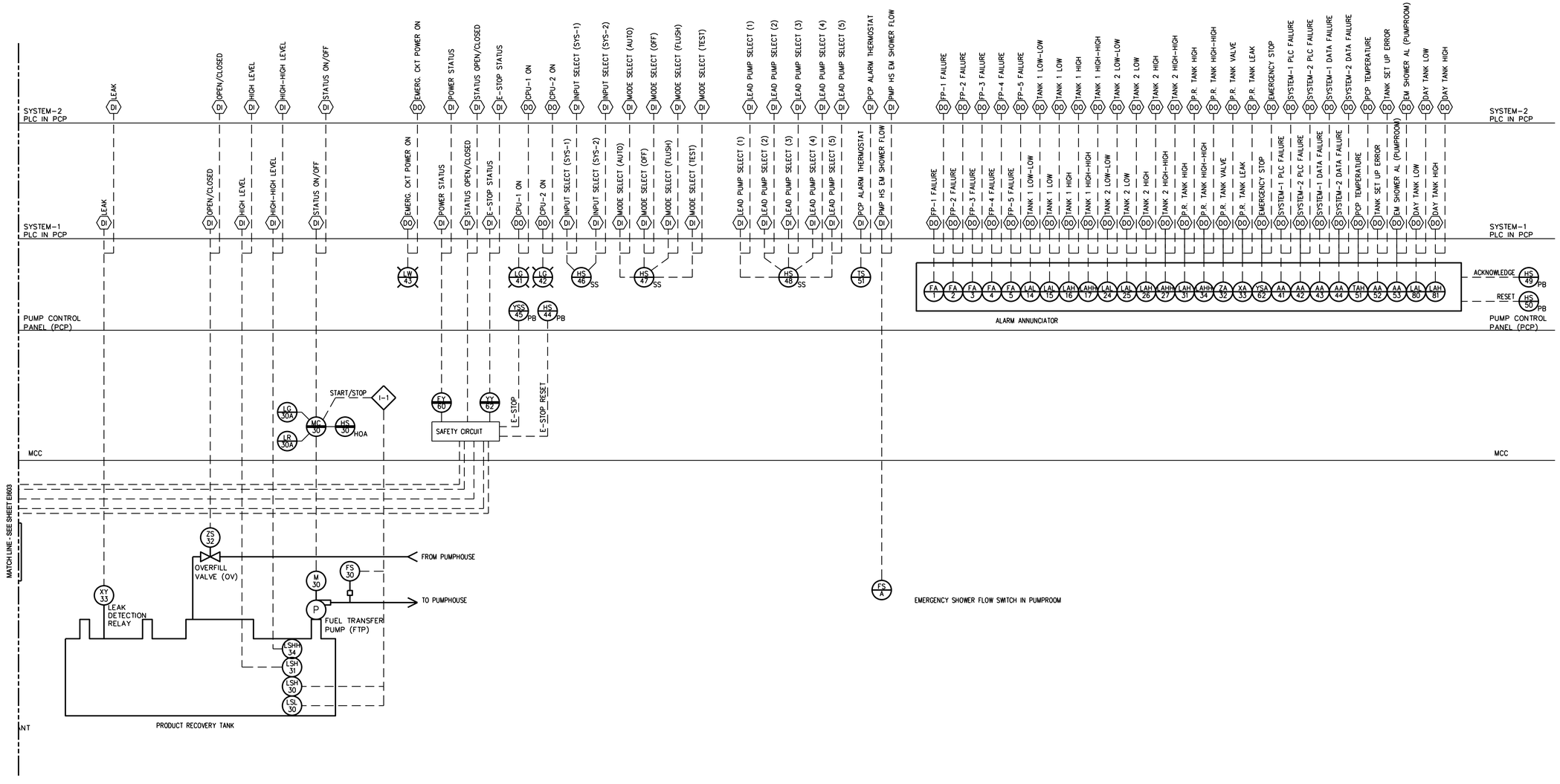

US ARMY CORPS OF ENGINEERS
OMAHA DISTRICT

MARK	DESCRIPTION	DATE	APPR.

MARK	DESCRIPTION	DATE	APPR.

DESIGNED BY: KEA
DATE: JULY 2010
DWN BY: KEA
CKD BY: SLO
SOLICITATION NO.: Y
SUBMITTED BY: RJS
CONTRACT NO.: Y
FILE NAME: C03TEI604.dwg
FILE NUMBER:
SIZE: 33.1X22
PLOT SCALE: 1 / 1in.
PLOT DATE: 6/28/2010

U. S. ARMY ENGINEER DISTRICT
CORPS OF ENGINEERS
OMAHA DISTRICT

DOD PRESSURIZED FUELING SYSTEM TYPE III

CONTROL SYSTEM I/O
SHEET 3

SHEET IDENTIFICATION NUMBER
EI604

I:\dwg\eleks\C03TEI604.dwg
g5ed5k4ea

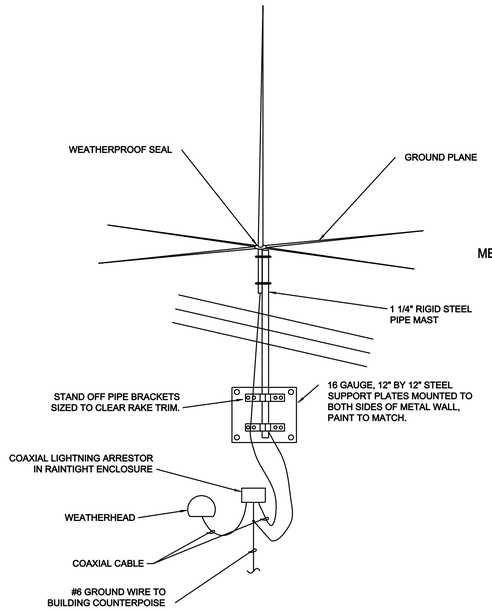

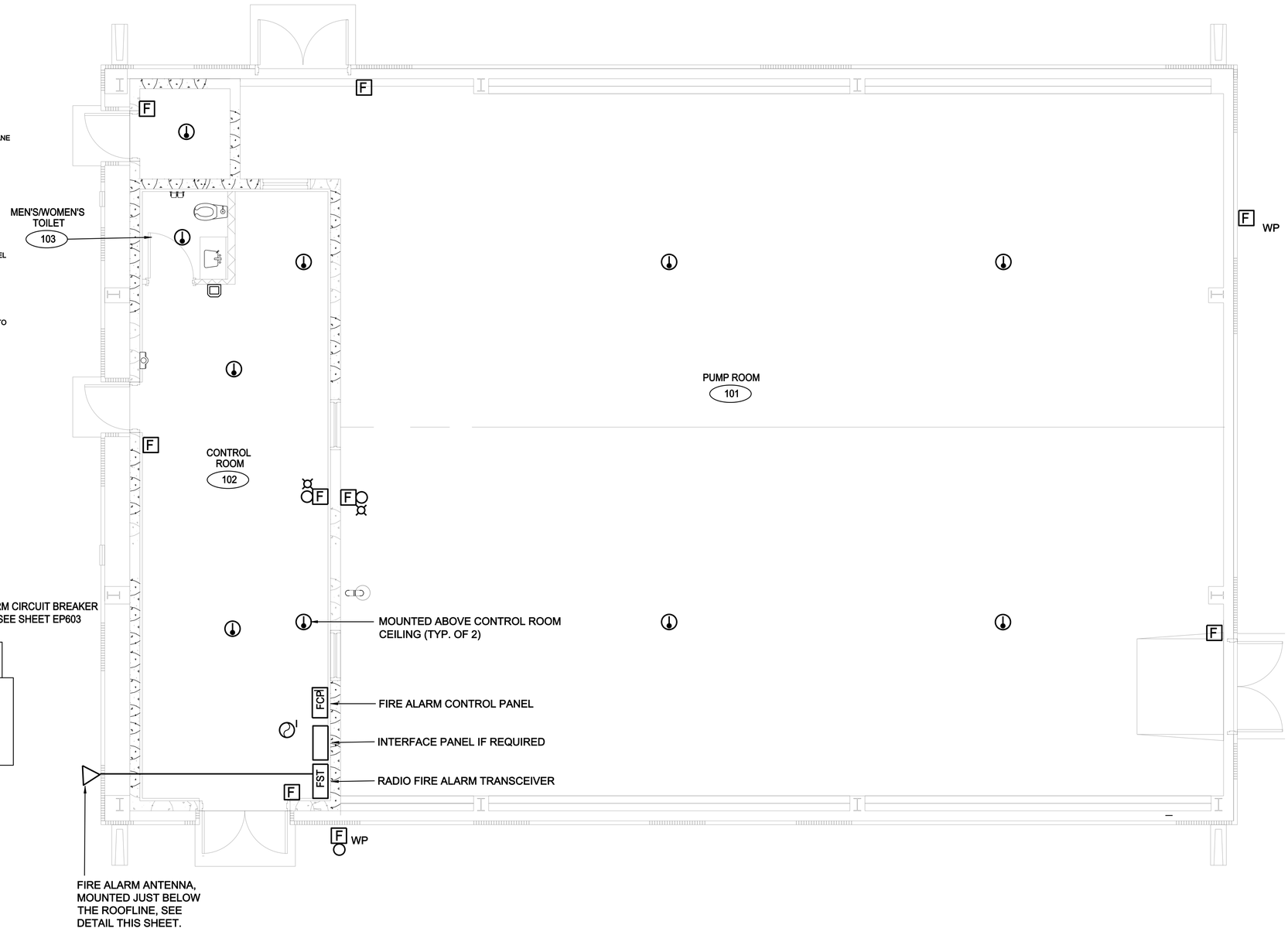

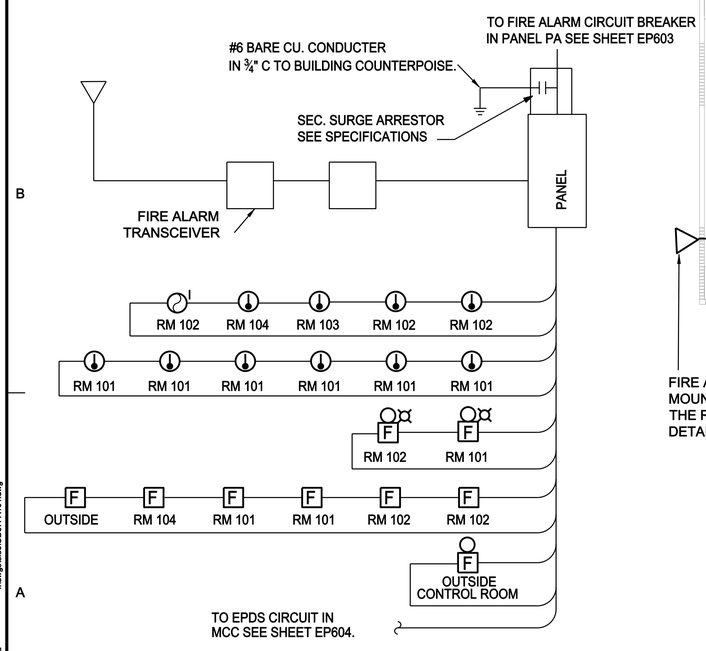

DESIGNER NOTE:
THE PLANS INDICATE A RADIO FIRE ALARM TRANSCEIVER, WHICH IS FOR THOSE MILITARY INSTALLATIONS THAT HAVE BASEWIDE RADIO FIRE REPORTING SYSTEMS. MODIFY PLANS FOR INSTALLATIONS THAT HAVE ANOTHER TYPE OF FIRE REPORTING SYSTEM

SCALE: 1/4 INCH = 1 FOOT
12" 0 5'

US ARMY CORPS OF ENGINEERS
OMAHA DISTRICT

MARK	DESCRIPTION	DATE	APPR.

MARK	DESCRIPTION	DATE	APPR.

DESIGNED BY: KEA | DATE: JULY 2010
DWN BY: KEA | CKD BY: SLO | SOLICITATION NO.: Y
SUBMITTED BY: RLS | CONTRACT NO.: Y
FILE NAME: OD37FA101.dwg | FILE NUMBER:
SIZE: 33.1X22 | PLOT SCALE: 1 / 1in. | PLOT DATE: 6/28/2010

U. S. ARMY ENGINEER DISTRICT
CORPS OF ENGINEERS
OMAHA DISTRICT

DOD PRESSURIZED FUELING SYSTEM TYPE III

FIRE DETECTION SYSTEM

SHEET IDENTIFICATION NUMBER
FA101

I:\dwg\elec\OD37FA101.dwg
g5ed5k4ea